RELIANT
RLS
LAND SERVICES

3216 South Fair Lane
Tempe, AZ 85282
TEL 903-422-6818
FAX 703.997.2155

58-DR-2006
06/16/2006

June 7, 2006

City of Scottsdale
7447 E. Indian School
Scottsdale, AZ 85251
Development Services Department

RE: Cingular Site Modification-Site # P242

To Whom It May Concern:

Cingular has an existing communications site located at 11500 N. 64th St. The current configuration consists of 3 panel antennas mounted on top of an existing APS utility pole. Due to the increased call volume, Cingular will need to upgrade their existing site with out increasing the height of the existing utility pole. Cingular is proposing to replace 3 of the existing panel antennas as well as install 3 additional panel antennas for a total of 6 antennas (2 per sector). The existing 18" canister will be replaced with a 29" canister to allow for the 3 additional panels. In addition, the site will require the installation of one new cabinet that will be placed inside the existing Cingular equipment shelter.

A timely approval for this minor site modification will allow Cingular's network to promptly cover areas currently lacking in communications coverage due to customer demand. Please contact me if you have any questions regarding this request. I can be reached best at 602.405.6750. Thank you for your time and attention and I look forward to working with the Scottsdale planning department on this project.

Sincerely,

Danielle Waechter
Reliant Land Services, Inc.
Zoning Specialist

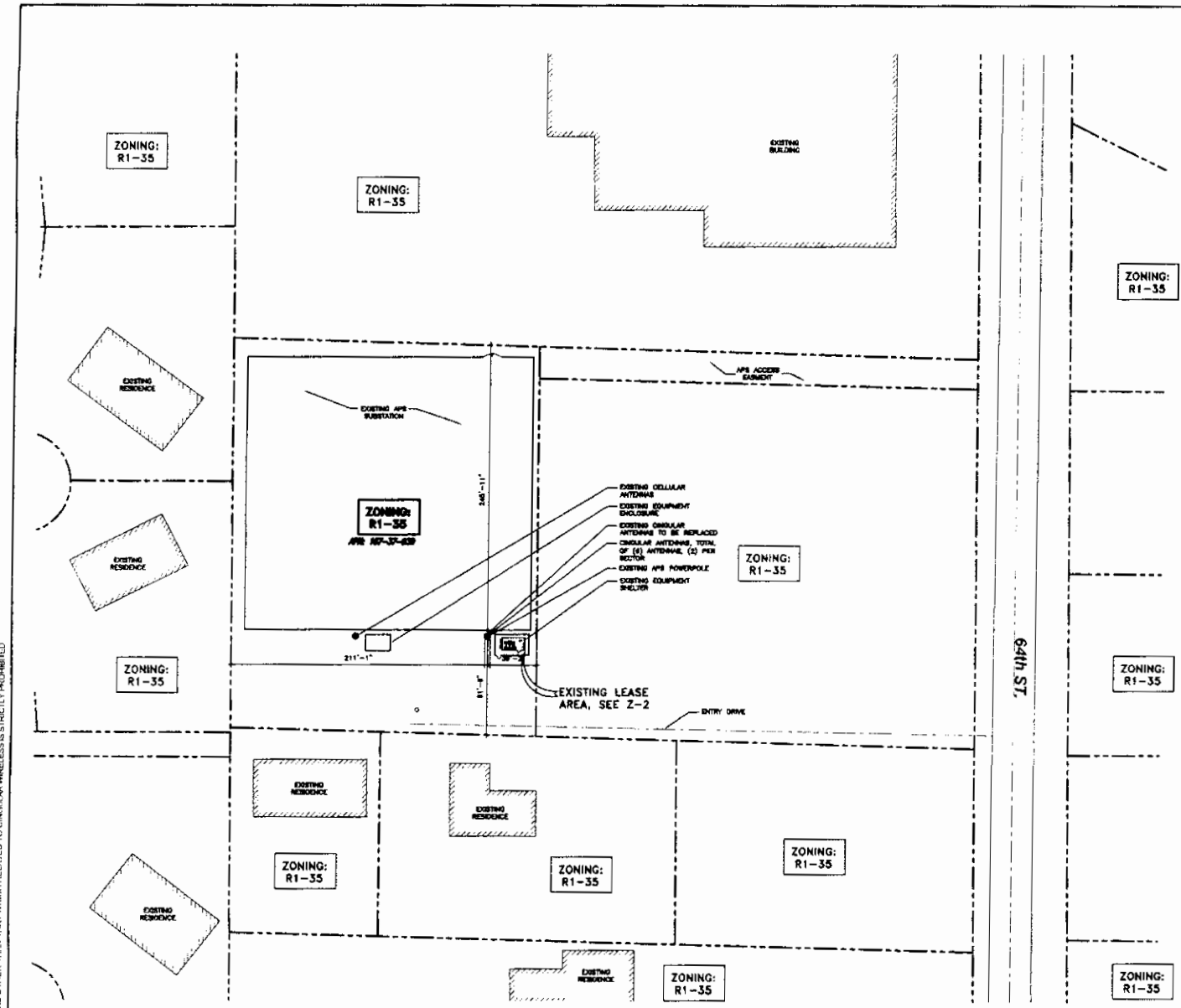

GENERAL NOTES:

SIGNS

1. INSTALL EMERGENCY INFORMATION PLACARD NEAR ENTRANCE GATE OF EQUIPMENT AREA (OR MOST VISIBLE PLACE ON OUTSIDE COMPOUND WALL). PLACARD IS TO CONTAIN SITE NAME, SITE NUMBER, COMPANY NAME, ADDRESS INFORMATION, AND A "800" NUMBER TO DIAL IN CASE OF EMERGENCY. PLACARD IS TO CONSIST OF HIGH CONTRAST LETTERING (WHITE BACK GROUND W/ RED LETTERING) BEHIND VANDAL RESISTANT LEXAN COVER.

2. INSTALL ADDRESS PLACARD NEAR ENTRANCE GATE OF EQUIPMENT AREA (OR FACING STREET OF ASSOCIATED ADDRESS). PLACARD IS TO CONTAIN 12" TALL HIGH CONTRAST LETTERING (WHITE BACK GROUND AND RED LETTERS) BEHIND VANDAL RESISTANT LEXAN COVER.

LIGHTING

1. LIGHTING WILL BE INSTALLED IF REQUIRED BY MUNICIPALITY FOR SECURITY PURPOSES.

2. ALL LIGHTING IS TO BE INSTALLED NO HIGHER THAN 8'-0". (UNLESS REQUIRED OTHERWISE BY INDIVIDUAL MUNICIPALITY).

3. ALL LIGHTING WILL BE THAT OF "FULL CUT OFF LENSES".

REPLACEMENT OF AREA LIGHTING

1. IN THE EVENT THE CARRIER PROPOSES TO REPLACE EXISTING FIELD, PARKING, OR BUILDING LIGHTING, ALL LIGHTS, FIXTURES WILL MATCH THE ORIGINAL INSTALLATION UNLESS NOTED OTHERWISE. LIGHTS WILL BE ALIGNED AND ADJUST BACK TO THEIR ORIGINAL POSITION.

COMPLIANCE

1. ADA COMPLIANCE: FACILITY IS NOT STAFFED AND NOT NORMALLY OCCUPIED.

2. CONTRACTOR IS RESPONSIBLE FOR ERECTING TEMPORARY BARRICADES AND/OR FENCING TO PROTECT THE SAFETY OF THE PUBLIC DURING CONSTRUCTION.

3. THE ANTENNAS SHALL NOT INTERFERE WITH ANY EXISTING COMMUNICATION SITES.

4. ALL ITEMS SHOWN ON THIS DRAWING ARE EXISTING UNLESS OTHERWISE NOTED.

5. DEVELOPMENT AND USE OF THIS SITE WILL CONFORM TO ALL APPLICABLE CODES AND ORDINANCES.

NOTE: SCALE IS FOR 24" x 36" SHEETS ONLY. REFER TO BAR SCALE OTHERWISE.

SITE PLAN

SCALE 1" = 20'

DESIGNED BY: CJH
DRAWN BY: CJH
CHECKED BY: MOF
APPROVED BY: RAB

REVISIONS

NO.	DATE	DESCRIPTION	BY
1	03/16/06	CITY COMMENTS	CJE
A	01/01/06	ISSUED FOR REVIEW AND COMMENTS	CJH

PROPRIETARY INFORMATION:
THE INFORMATION CONTAINED IN THIS SET OF CONSTRUCTION DOCUMENTS IS PROPRIETARY BY NATURE. ANY USE OR DISCLOSURE OTHER THAN THAT WHICH RELATES TO CINGULAR WIRELESS IS STRICTLY PROHIBITED

CLIENT:
cingular WIRELESS
PROJECT OFFICE:
2366 E. CAMELBACK RD. SUITE 1100
PHOENIX, AZ 85016

CONSULTANT:
MACTEC
MACTEC ENGINEERING AND CONSULTING, INC.
3630 E. WEIR AVE.
PHOENIX, ARIZONA 85040
PHONE: (602) 437-0250
FAX: (602) 437-3675

SEAL:

SITE NUMBER: PHNXAZP242
SITE TYPE: POWERPOLE
SITE ADDRESS: 11500 N. 64TH ST PHOENIX, AZ 85254
APPL. TYPE: ZONING
SHEET NAME: SITE PLAN
MACTEC PROJECT NUMBER: 4974-05-2001.01
SHEET NUMBER: Z-1

THE INFORMATION CONTAINED IN THIS SET OF DRAWINGS IS PROPRIETARY BY NATURE. ANY USE OR DISCLOSURE OTHER THAN THAT WHICH RELATES TO CINGULAR WIRELESS IS STRICTLY PROHIBITED

58-DR-2006
06/16/2006

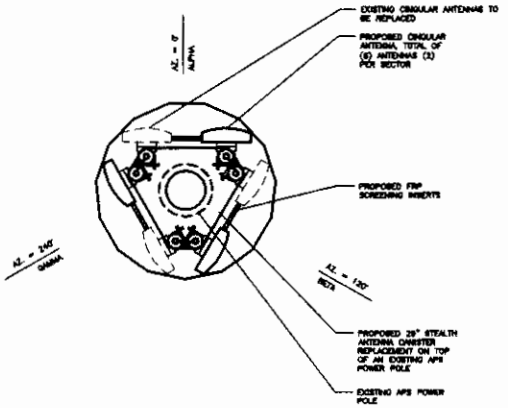

NOTES:
- LOCATION OF TTUNA'S IS CONTINGENT UPON SPATIAL CONSTRAINTS, CONTRACTOR TO FIELD VERIFY
- ANTENNA SPECIFICATIONS PROVIDED BY CINGULAR
- ALL ANTENNAS AND ASSOCIATED MOUNTING HARDWARE WILL MATCH ANY EXISTING INSTALLATION, I.E.: PAINTING, TEXTURING, ETC..

ANTENNA LAYOUT

SCALE: N.T.S. | 2

ANTENNA DIMENSIONS				
	MODEL #	HIGHT	WIDTH	DEPTH
NEW	RA11.7721	52"	7"	4"
OLD	RR65-18-XXDPL3	96"	8"	2.75"

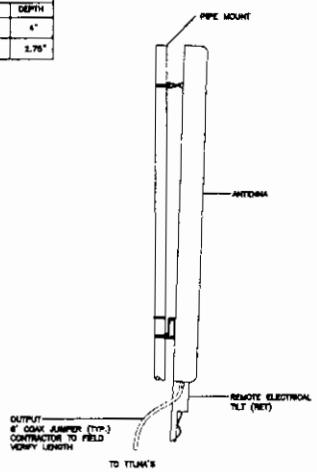

NOTES:
- LOCATION OF TTUNA'S IS CONTINGENT UPON SPATIAL CONSTRAINTS, CONTRACTOR TO FIELD VERIFY
- ALL ANTENNAS AND ASSOCIATED MOUNTING HARDWARE WILL MATCH ANY EXISTING INSTALLATION, I.E.: PAINTING, TEXTURING, ETC..

ANTENNA DETAIL

SCALE: N.T.S. | 3

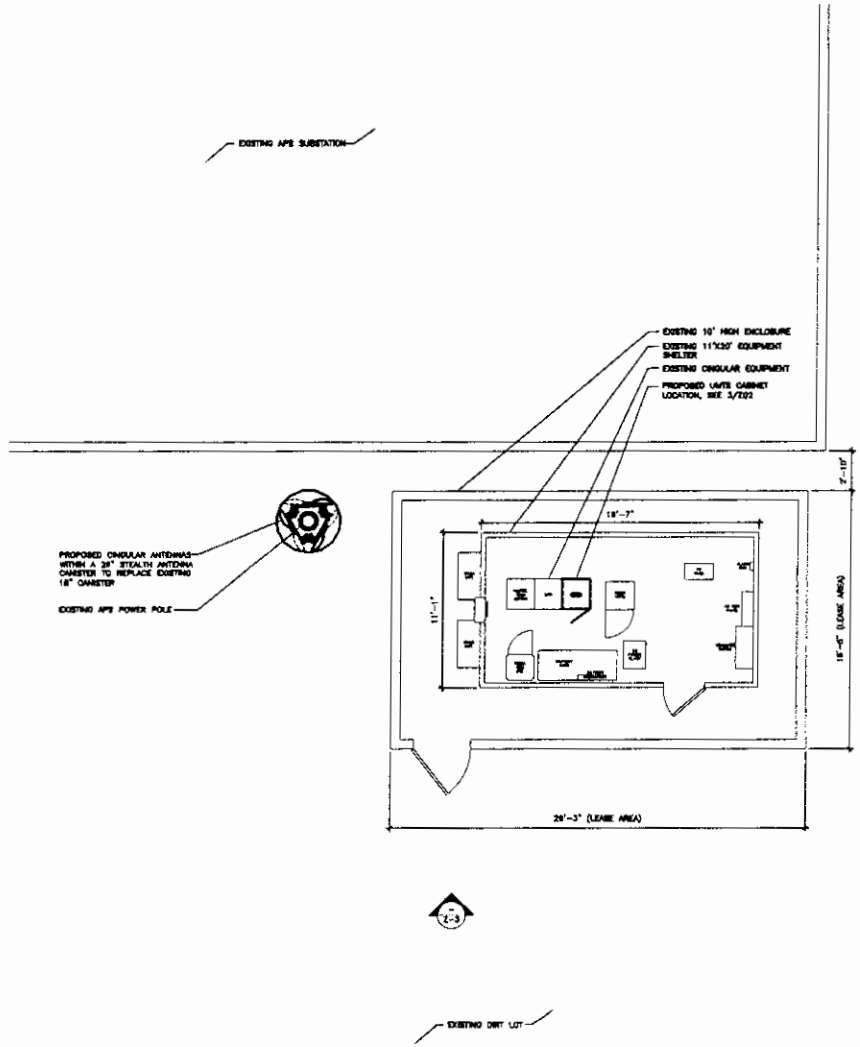

NOTE: SCALE IS FOR 24" x 36" SHEETS ONLY. REFER TO BAR SCALE OTHERWISE.

ENLARGED SITE PLAN

SCALE: 1/4" = 1'-0" | 1

DESIGNED BY:	CJH
DRAWN BY:	CJH
CHECKED BY:	MDF
APPROVED BY:	RAB

REVISIONS

NO.	DATE	DESCRIPTION	BY
1	03/14/06	CITY COMMENTS	CJK
A	01/01/06	ISSUED FOR REVIEW AND COMMENTS	CJH

PROPRIETARY INFORMATION:
THE INFORMATION CONTAINED IN THIS SET OF CONSTRUCTION DOCUMENTS IS PROPRIETARY BY NATURE. ANY USE OR DISCLOSURE OTHER THAN THAT WHICH RELATES TO CINGULAR WIRELESS IS STRICTLY PROHIBITED

CLIENT:
cingular WIRELESS
PROJECT OFFICE:
2390 E. CAMELBACK RD. SUITE 1100
PHOENIX, AZ 85016

CONSULTANT:
MACTEC
MACTEC ENGINEERING AND CONSULTING, INC.
3630 E. IRVE AVE.
PHOENIX, ARIZONA 85040
PHONE: (602) 437-0250
FAX: (602) 437-3475

SEAL:

SITE NUMBER: PHNXAZP242
SITE TYPE: POWERPOLE
SITE ADDRESS: 11500 N. 64TH ST PHOENIX, AZ 85254
APPL. TYPE: ZONING
SHEET NAME: ENLARGED SITE PLAN AND ANTENNA LAYOUT
MACTEC PROJECT NUMBER: 4974-05-2001.01
SHEET NUMBER: Z-2

THE INFORMATION CONTAINED IN THIS SET OF DRAWINGS IS PROPRIETARY BY NATURE. ANY USE OR DISCLOSURE OTHER THAN THAT WHICH RELATES TO CINGULAR WIRELESS IS STRICTLY PROHIBITED.

58-DR-2006
06/16/2006

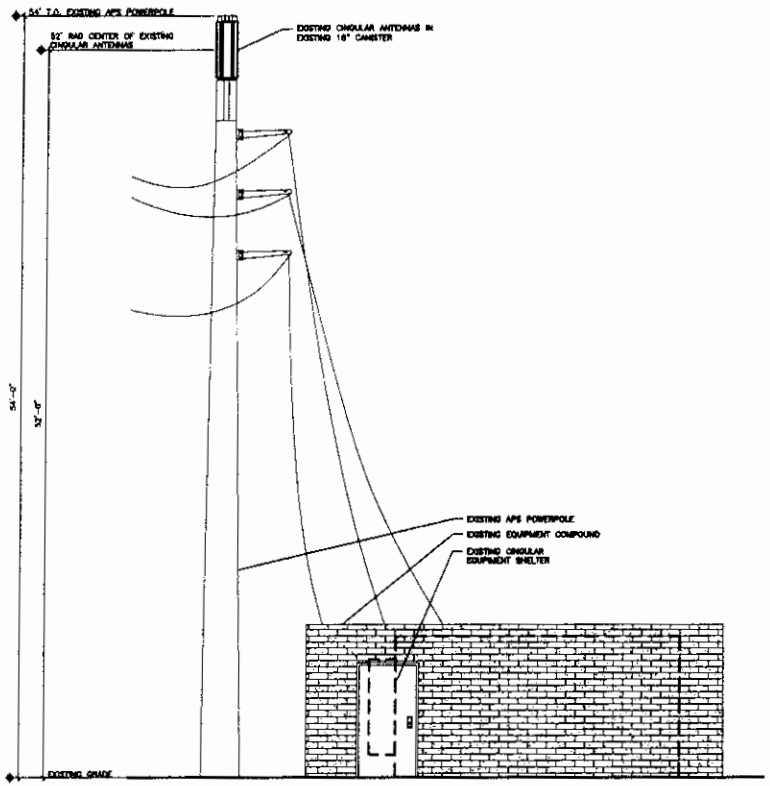

NOTE: SCALE IS FOR 24" x 36" SHEETS ONLY. REFER TO 8½" SCALE OTHERWISE.

EXISTING ELEVATION (NORTH) | SCALE: 1/4" = 1'-0" | 2

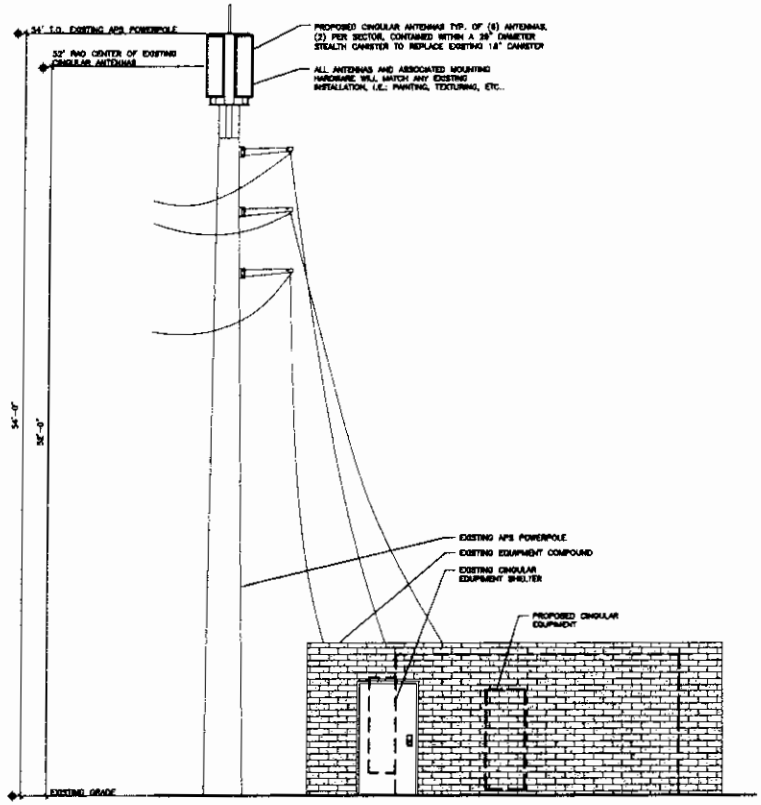

NOTE: ANALYSIS AND DESIGN OF TOWER AND FOUNDATION TO BE PERFORMED BY OTHERS.

NOTE: SCALE IS FOR 24" x 36" SHEETS ONLY. REFER TO 8½" SCALE OTHERWISE.

PROPOSED ELEVATION (NORTH) | SCALE: 1/4" = 1'-0" | 1

DESIGNED BY: CJH
DRAWN BY: CJH
CHECKED BY: MOF
APPROVED BY: RAB

REVISIONS

NO.	DATE	DESCRIPTION	BY
1	03/16/06	CITY COMMENTS	CJE
A	01/31/06	ISSUED FOR REVIEW AND COMMENTS	CJH

PROPRIETARY INFORMATION:
THE INFORMATION CONTAINED IN THIS SET OF CONSTRUCTION DOCUMENTS IS PROPRIETARY BY NATURE. ANY USE OR DISCLOSURE OTHER THAN THAT WHICH RELATES TO CINGULAR WIRELESS IS STRICTLY PROHIBITED

CLIENT:
cingular WIRELESS
PROJECT OFFICE:
2366 E. CAMELBACK RD. SUITE 1100
PHOENIX, AZ 85016

CONSULTANT:
MACTEC
MACTEC ENGINEERING AND CONSULTING, INC.
3430 E. WEIR AVE.
PHOENIX, ARIZONA 85040
PHONE: (602) 437-0250
FAX: (602) 437-3675

SEAL:

SITE NUMBER: PHNXAZP242
SITE TYPE: POWERPOLE
SITE ADDRESS: 11500 N. 64TH ST PHOENIX, AZ 85254
APPL. TYPE: ZONING
SHEET NAME: NORTH AND EAST ELEVATIONS
MACTEC PROJECT NUMBER: 4974-05-2001.01
SHEET NUMBER: Z-3

THE INFORMATION CONTAINED IN THIS SET OF DRAWINGS IS PROPRIETARY BY NATURE. ANY USE OR DISCLOSURE OTHER THAN THAT WHICH RELATES TO CINGULAR WIRELESS IS STRICTLY PROHIBITED.

58-DR-2006
06/16/2006