Project Narrative

This document will be uploaded to a Case Fact Sheet on the City's web site.

Date: _____ Project No.: _____ - PA - _____

Coordinator: _____ Case # 78-DR-2006

Project Name: _____ 08/11/2006

Project Location: 15075 North 130th Street

Property Details:

☒ Single-Family Residentail ☐ Multi-Family Residential ☐ Commercial ☐ Industrial

Current Zoning: R1-43 ESL Proposed Zoning: R1-43 ESL

Number of Buildings: 3 Parcel Size: 4.6 Acres (200,866 SF)

Gross Floor Area/Total Units: 26,393 SF Floor Area Ratio/Density: 13%

Parking Required: 112 Parking Provided: 123

Setbacks: N - 65' S - 27' E - 285' W - 90'

Description of Request:

This development is to house three distinct facilities for the Baha'i community of Scottsdale:

* A worship hall with a 250-seat capacity
* A Sunday School for religious instruction on Sundays (Please note that this building is not intended to be used for non-religious education such as a parochial or charter school.)
* The smallest building is the Youth Center for after-school activities of Baha'i youth.

The placement of each building on the site and the building height of maximum 24 feet are to keep the development in context with the residential scale. The buildings elevations and exterior materials are chosen to make the structures blend into the landscaping and the surrounding environment.

The site has been designed with the only public access tot he property to be from 130th Street. The entrance/access to the site has been pushed to the farthest point possible from the intersection to allow for vehicular queuing. We have provided an emergency exit to Shea Boulevard only for the Fire Department with a 6" curb. There are 123 parking spaces on the site to accommodate the worst-case scenario for parking demand. The parking has been designed to meet landscape requirements, lighting, handicap requirements, and circulation per the City requirements. Over 40% of the water run-off is being contained on the site in the area of the view corridor acting as the retention. The remaining 60% is being drained into the existing two washes surrounding the property

DESIGN NARRATIVE : SEE ATTACHMENT

The use of copper for the roofs was chosen to acknowledge our Copper State and its significant mining history that has enriched our economy for decades. The use of split face block on the primary massing of the building gives the structures a sense of order while achieving harmony with the surrounding mountain. For this submission, we are proposing twelve inch panels with standing seam and cap, finished in the old penny look. However, we are also looking into the use of interlocking large copper shingles to more closely represent the ideology of the wings. We respectfully request that the Design Review Board consider both options so we may choose the one that meets our design objectives and our client's budget.

Although we were not able to design the building with full consideration to "LEED" standards due to a number of program restrictions and religious design criteria, we have made every effort to implement many of the "green" criteria in our design to protect our environment and to teach sensible design aspects to our future generations. For example, we have designed clearstory protected windows to provide natural lighting to the worship hall, classrooms and many other spaces through out the facility. We have placed the buildings with proper orientation, wherever possible, to respond to and take advantage of the environmental conditions. To promote energy saving, we are utilizing low voltage and fluorescent lighting through out the building. The use of native material such as copper, stone and other local fabricated material will promote Arizona's industries. The heating, cooling, and ventilation system will be designed to be responsive to the occupancy load and to limit any possible energy waste. The windows are sized, located, and protected by an overhang or a solar screen in order to bring light into the building while keeping out the sun. The landscaping, mostly native with a few other well-acclimated plants, was designed to strictly use low water-using species.

In summary, we hope that this project will environmentally become an extension of the existing site while adding to the social, cultural and religious community of Scottsdale, increasing our diversity and enriching each others' lives.

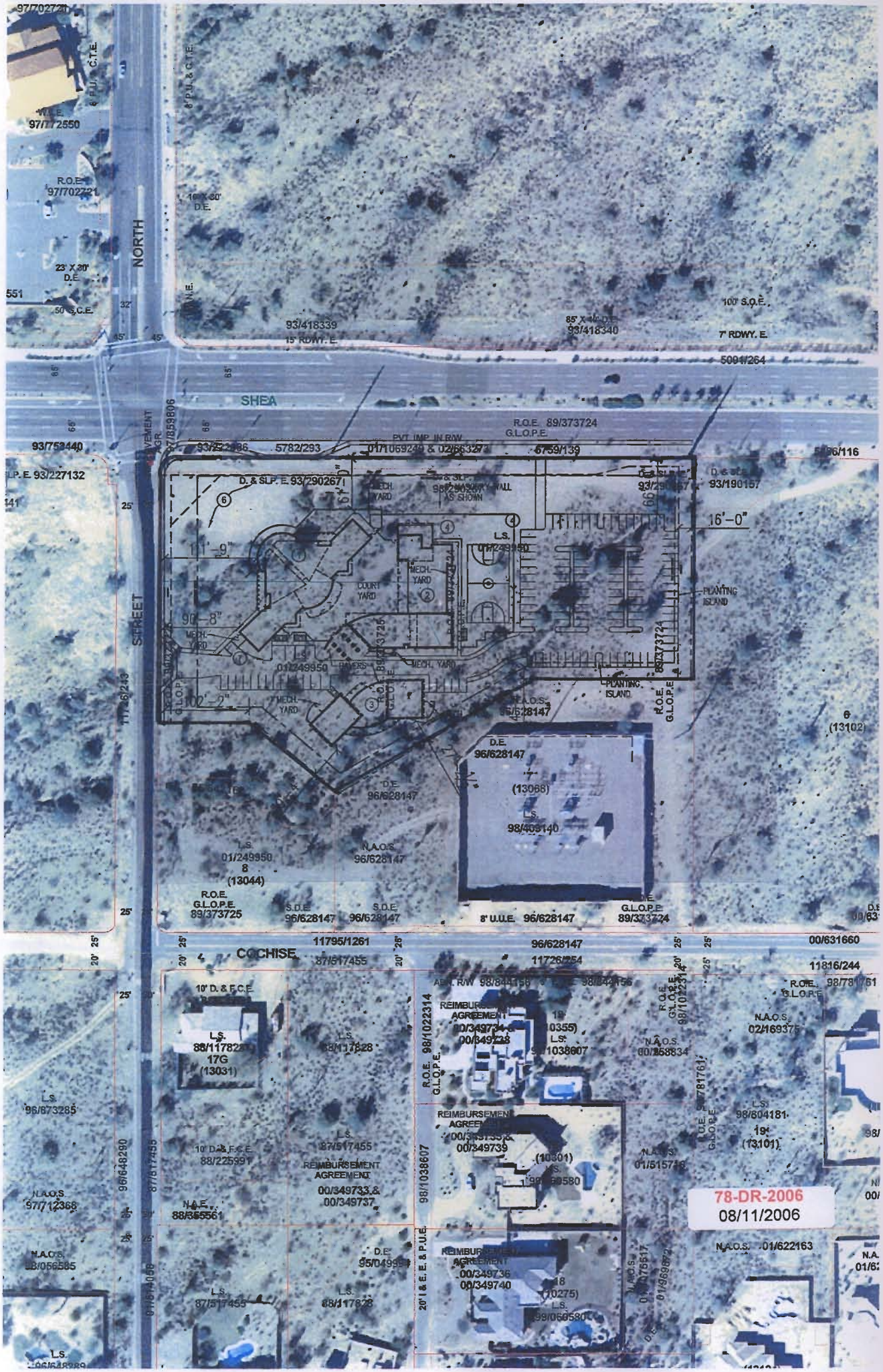

NORTH
STREET
SHEA
COCHISE
R.O.E. 89/373724
G.L.O.P.E.
PVT. IMP. IN R/W
D. & SLP. E. 93/290267
MECH. YARD
COURT YARD
PLANTING ISLAND
16'-0"
111'-9"
90'-8"
102'-2"
L.S. 01/249950
N.A.O.S. 96/628147
D.E. 96/628147
L.S. 98/409140
R.O.E. G.L.O.P.E. 89/373725
S.D.E. 96/628147
8' U.U.E. 96/628147
G.L.O.P.E. 89/373724
11795/1261
96/628147
00/631660
11816/244
10' D. & F.C.E.
L.S. 88/117828
REIMBURSEMENT AGREEMENT
00/349733 & 00/349737
N.A.O.S. 97/712368
N.A.E. 88/355561
L.S. 96/673285
N.A.O.S. 98/056585
L.S. 87/517455
L.S. 88/117828
N.A.O.S. 02/169375
L.S. 98/804181
N.A.O.S. 01/622163
78-DR-2006
08/11/2006

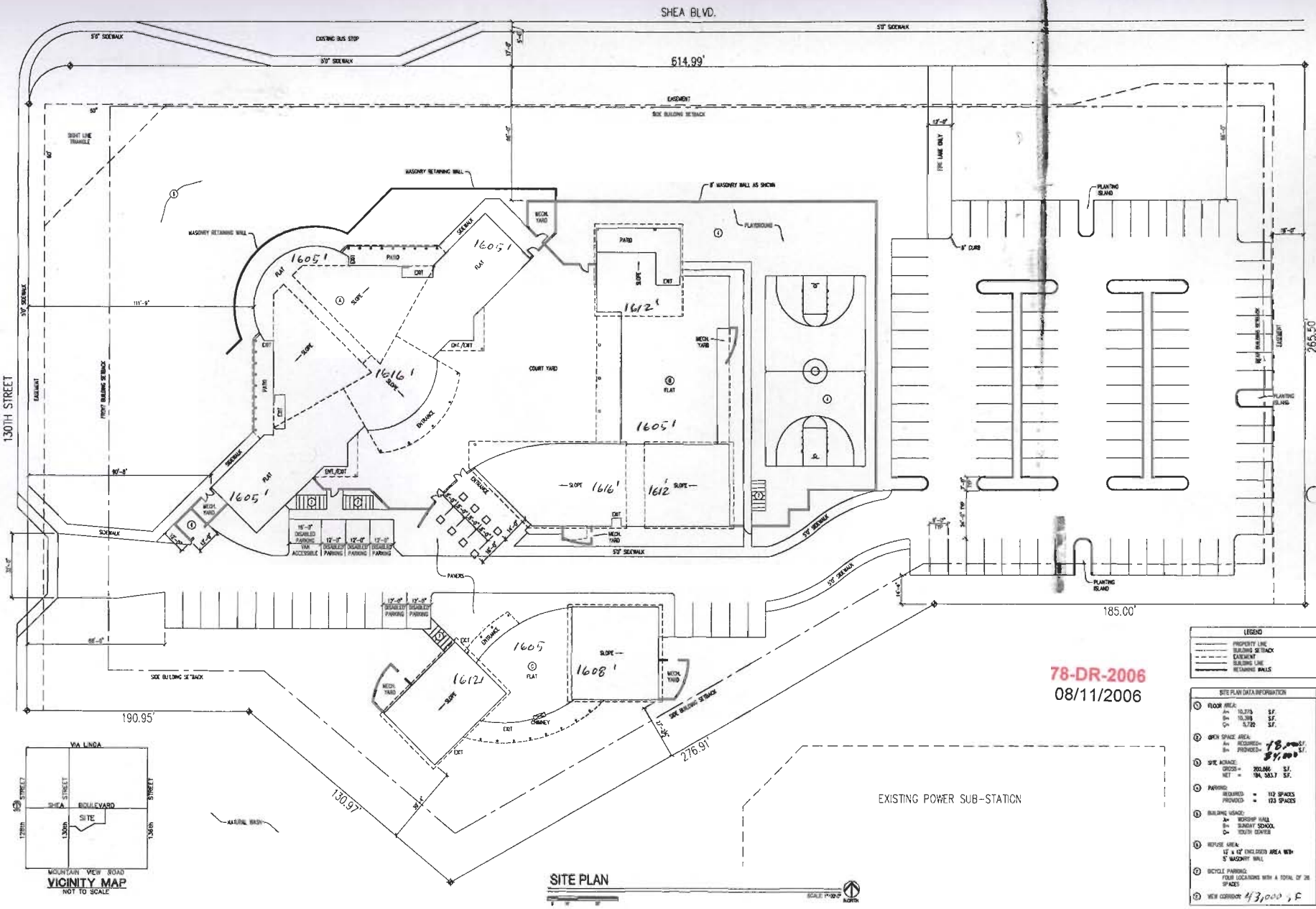

78-DR-2006
08/11/2006

LEGEND
- PROPERTY LINE
- BUILDING SETBACK
- EASEMENT
- BUILDING LINE
- RETAINING WALLS

SITE PLAN DATA INFORMATION

1. FLOOR AREA:
   A= 10,275 S.F.
   B= 10,398 S.F.
   C= 5,722 S.F.
2. OPEN SPACE AREA:
   A= REQUIRED= 78,000 S.F.
   B= PROVIDED= 84,000 S.F.
3. SITE ACRAGE:
   GROSS = 200,866 S.F.
   NET = 184,583.7 S.F.
4. PARKING:
   REQUIRED = 112 SPACES
   PROVIDED = 123 SPACES
5. BUILDING USAGE:
   A= WORSHIP HALL
   B= SUNDAY SCHOOL
   C= YOUTH CENTER
6. REFUSE AREA:
   12' x 12' ENCLOSED AREA WITH 5' MASONRY WALL
7. BICYCLE PARKING:
   FOUR LOCATIONS WITH A TOTAL OF 28 SPACES
8. VIEW CORRIDOR: 43,000 S.F.

REVISION

SCOTTSDALE
BAHA'I CENTER & EDUCATIONAL COMPLEX

JASON ESLAMIE
AIA

JE DESIGN
ARCHITECTS AND ENVIRONMENTAL PLANNERS

DRAWN: C.H.
CHECKED: B.G.
DATE: 1/31/2006
PRJ. NO.

SHEET
A-1
SHEET 1 OF X

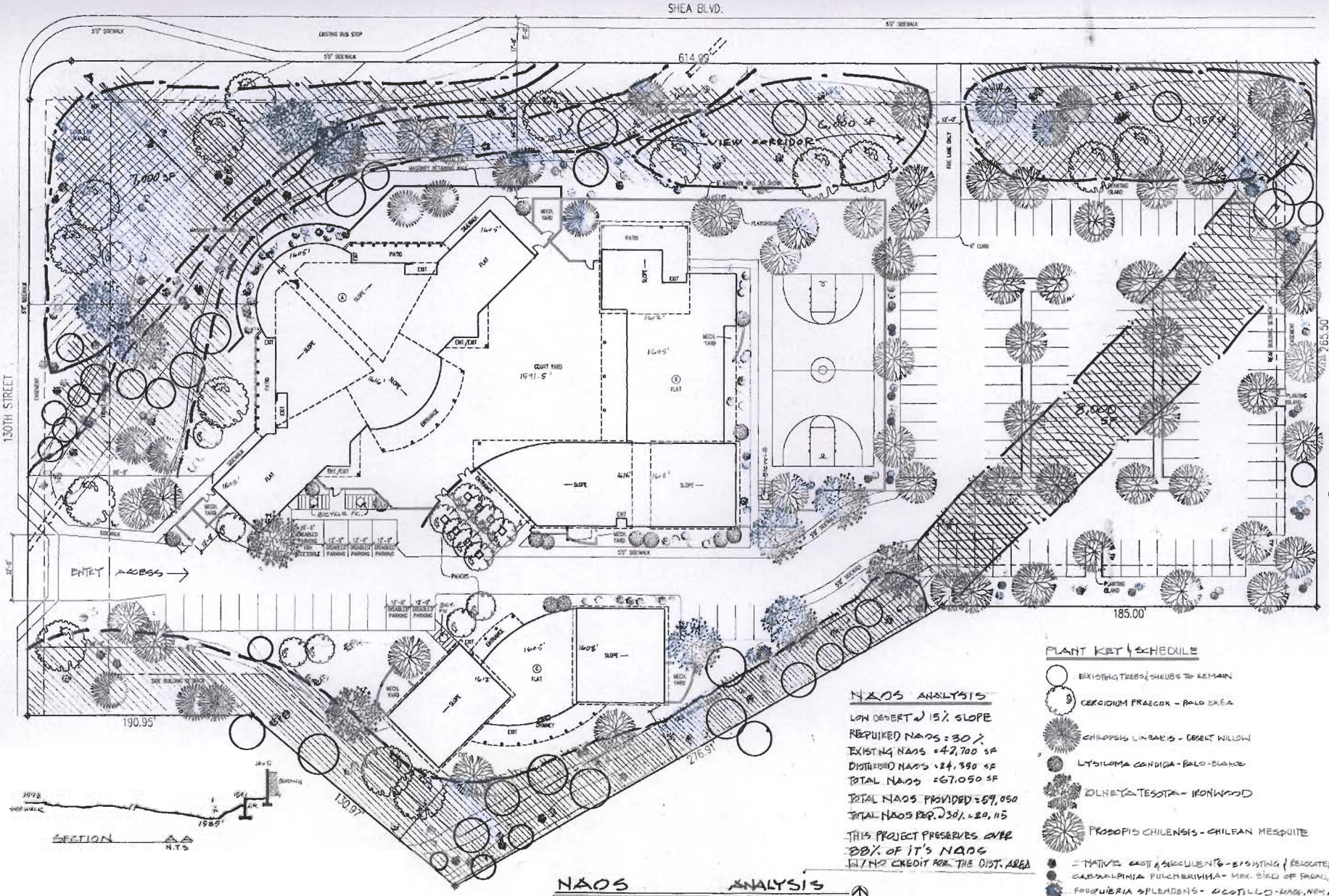

REVISION

78-DR-2006
08/11/2006

SCOTTSDALE
BAHA'I CENTER & EDUCATIONAL COMPLEX

JASON ESLAMIEH
AIA

JE DESIGN
ARCHITECTS AND ENVIRONMENTAL PLANNERS

DRAWN:
CHECKED:
DATE: 1/31/2006
PRJ. NO.

SHEET
L-1-NAOS
SHEET 1 OF X

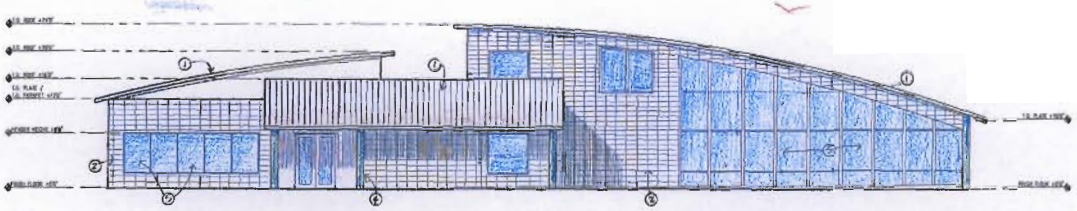

NORTH ELEVATION

SCHOOL AND TRAINING INSTITUTE

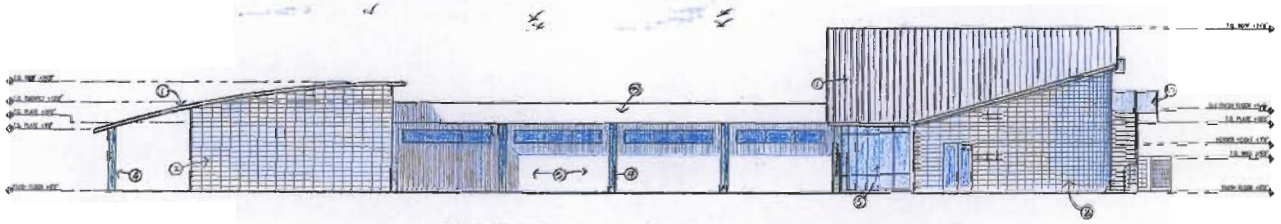

WEST ELEVATION

SCHOOL AND TRAINING INSTITUTE

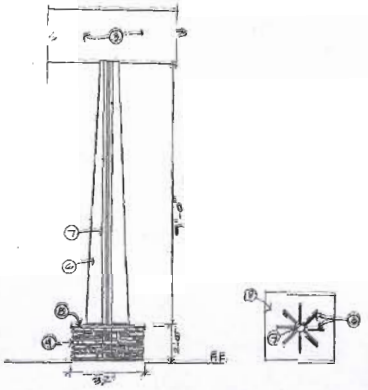

TYPICAL COLUMN DETAIL - PLAN VIEW

1/2"

Exterior colors, finishes and specifications

1. Standing seam, pewter roof with 1/8" wide panel and 1/2" standing seam. With old penny finish.
2. 8" by 16" Split face masonry block; custom color, rustic brown.
3. Western one coat stucco with synthetic smooth finish, with integrated color by Sherwin Williams: Unfussy Beige, #FN 44 Group SW 6043.
4. Steel columns on masonry base: see detail.
5. Insulated glass windows with 1 1/2" mullions factory paint with matching color by Sherwin Williams: Drizzle # B-G/B/30 Group SW 6479.
6. 1/2" thick steel fins welded to the 4" diameter steel columns. Columns and fins shall be painted with Sherwin Williams: Drizzle # B-G/B/30 Group SW 6479.
7. 4" steel columns Drizzle # B-G/B/30 Group SW 6479.
8. 1" thick Sedona Red sandstone cap.
9. Arizona Ledgestone by Centurian in chinky style with no grout.
10. Stair railing using perforated metal by McNichols Company 5/64" diameter by 1/8" flat dia., 75 holes per 38% O/H with 1 1/2" square steel tube to be painted with Sherwin Williams: Drizzle # B-G/B/30 Group SW 6479.
11. Steel shade structures with perforated metal face finishing by McNichols Company perforated metal by McNichols Company 5/64" diameter by 1/8" flat dia., 75 holes per 38% O/H with 1 1/2" square steel tube to be painted with Sherwin Williams: Drizzle # B-G/B/30 Group SW 6479.
12. 5 feet tall mechanical screen walls typical. The masonry shall be installed sideways with stack joints for ventilation.
13. Exterior mechanical doors solid steel painted with Sherwin Williams: Drizzle # B-G/B/30 Group SW 6479.
14. Structural steel truss to be painted with Sherwin Williams: Drizzle # B-G/B/30 Group SW 6479.
15. Stained glass art piece with nine painted star symbol to be submitted later.

REVISION

78-DR-2006

08/11/2006

SCOTTSDALE

BAHAI CENTER & EDUCATIONAL COMPLEX

JASON ESLAMER

AIA

JE DESIGN

ARCHITECTS AND ENVIRONMENTAL PLANNERS

DRAWN: GH

CHECKED: BG/JA

DATE: 1/31/2006

PN: NO

SHEET

A-6

SHEET 1 OF X

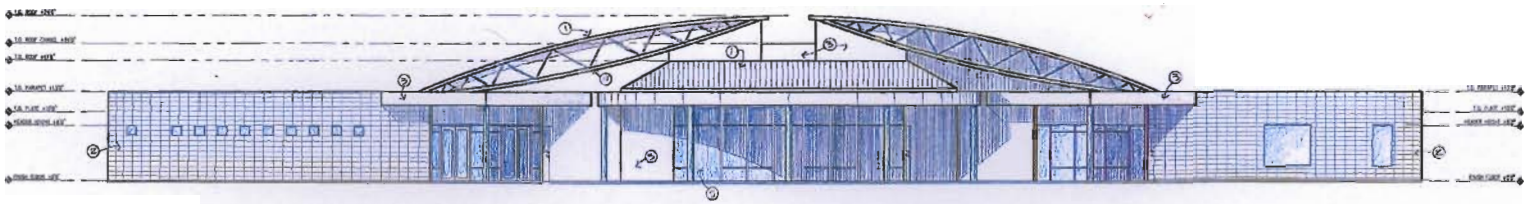

EAST ELEVATION

CENTER BUILDING

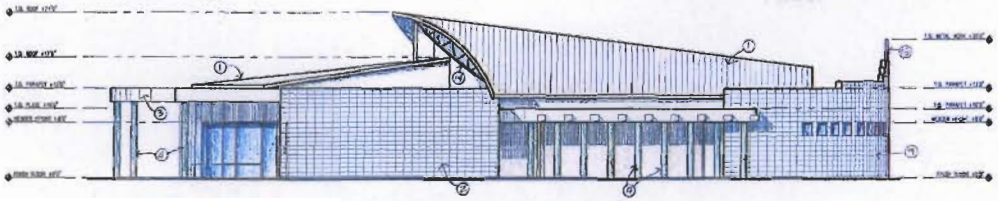

EAST ELEVATION

CENTER BUILDING

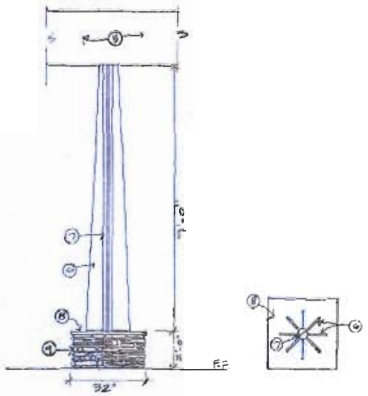

TYPICAL COLUMN DETAIL - PLAN VIEW

1/2"

Exterior colors, finishes and specifications

1. with new painted star symbol to be submitted later. Standing seam copper roof with 12" wide panel and ½" standing seam. Wash old penny finish.
2. 8" by 16" Split face masonry block; custom color: rustic brown.
3. Western sno coat stucco with synthetic smooth finish; with integrated color by Sherwin Williams: Unusual Beige, #7H 44 Group SW 6043.
4. Steel columns as masonry lines; see detail.
5. Insulated glass windows with 1 ½" mullions factory paint with matching color by Sherwin Williams: Drizzle # B-G9/30 Group SW 6479.
6. ½" Black steel fins welded to the 4" diameter steel columns. Columns and fins shall be painted with Sherwin Williams: Drizzle # B-G9/30 Group SW 6479.
7. 4" steel columns Drizzle # B-G9/30 Group SW 6479.
8. 1" thick Sedona Red sandstone cap
9. Arizona Ledgestone by Centurtas in chinky style with no grout
10. Stair railing using perforated metal by McNichols Company,.064" diameter by 1/8" Sq.cen., 75 holes PB 38% O B with 1 ½" square steel tube to be painted with Sherwin Williams: Drizzle # B-G9/30 Group SW 6479.
11. Stair tower structure with perforated metal face finished by McNichols Company perforated metal by McNichols Company.064" diameter by 1/8" Sq.cen., 75 holes PB 38% O/H with 1 ½" square steel tube to be painted with Sherwin Williams: Drizzle # B-G9/30 Group SW 6479.
12. 5 foot tall mechanical screen walls typical. The masonry shall be installed sideways with stack joints for [illegible]
13. Exterior mechanical doors sides steel painted with Sherwin Williams: Drizzle # B-G9/30 Group SW 6479.
14. Structural steel truss to be painted with Sherwin Williams: Drizzle # B-G9/30 Group SW 6479.
15. Stained glass art piece

REVISION

78-DR-2006

08/11/2006

SCOTTSDALE

BAHAI CENTER & EDUCATIONAL COMPLEX

JASON ESLAMIEH

AIA

JE DESIGN

ARCHITECTS AND ENVIRONMENTAL PLANNERS

DRAWN: G.R.

CHECKED: B.G.

DATE: 11/01/2006

PRJ NO

SHEET A-7

SHEET 1 OF X

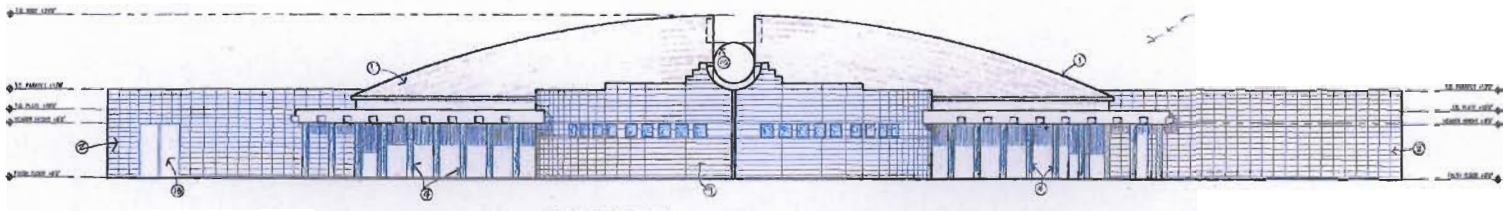

NORTH ELEVATION

CENTER BUILDING

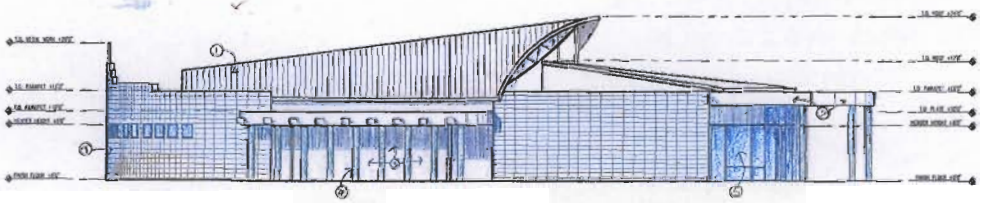

WEST ELEVATION

CENTER BUILDING

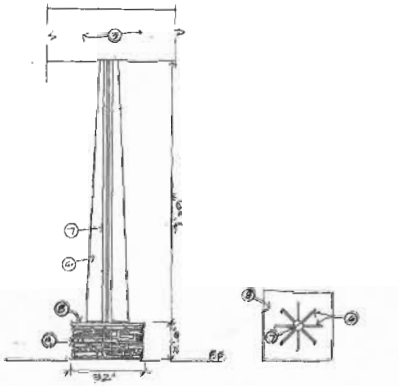

TYPICAL COLUMN DETAIL - PLAN VIEW

1/2"

Exterior colors, finishes and specifications

1. with nine pointed star painted to be submitted later. Standing seam roofing, red with 12" wide panel and 6" standing seam. With old penny finish.
2. 8" by 16" Split face masonry block, custom color: rustic brown.
3. Medium and cool stucco with synthetic smooth finish; with integrated color by Sherwin Williams: Unfoung Beige, SW 44 Group SW 6562.
4. Steel columns on masonry base as a detail.
5. Insulated glass windows with 1 1/2" mullions factory painted with matching color by Sherwin Williams: Grizzle # B-0/B35 Group SW 6478.
6. 8" " thick steel flag, welded to the 4" diameter steel columns. Columns and flag shall be painted with Sherwin Williams: Grizzle # B-0/B35 Group SW 6478.
7. 4" steel columns finished # B-0/B35 Group SW 6478.
8. 4" thick Sedona Red sandstone cap
9. Arizona Ledgestone by Centurion in chinky style with no grout.
10. Stair railing using perforated metal by McNichols Company.0064" diameter by 1/8" Stg.ctrs. 74 holes PW 24" OH with 1 1/2" square steel tube to be painted with Sherwin Williams: Grizzle # B-0/B35 Group SW 6478.
11. Steel stairs treads with perforated metal tag provided by McNichols Company perforated metal by McNichols Company.0064" diameter by 1/8" Stg.ctrs. 74 holes PW 24" OH with 1 1/2" square steel tube to be painted with Sherwin Williams: Grizzle # B-0/B35 Group SW 6478.
12. 8 feet tall mechanical screen walls typical. The masonry shall be installed sideways with slots for ventilation.
13. Exterior mechanical doors solid steel painted with Sherwin Williams: Grizzle # B-0/B35 Group SW 6478.
14. Structural steel ones to be painted with Sherwin Williams: Grizzle # B-0/B35 Group SW 6478.
15. Stained glass art piece

REVISION

78-DR-2006

08/11/2006

SCOTTSDALE
BAHAI CENTER & EDUCATIONAL COMPLEX

JASON ESLAMIEH
AIA

JE DESIGN
ARCHITECTS AND ENVIRONMENTAL PLANNERS

DRAWN: G.P.
CHECKED: E.S.
DATE: 1/26/2006
PRJ NO:

SHEET
A-8
SHEET 1 OF X