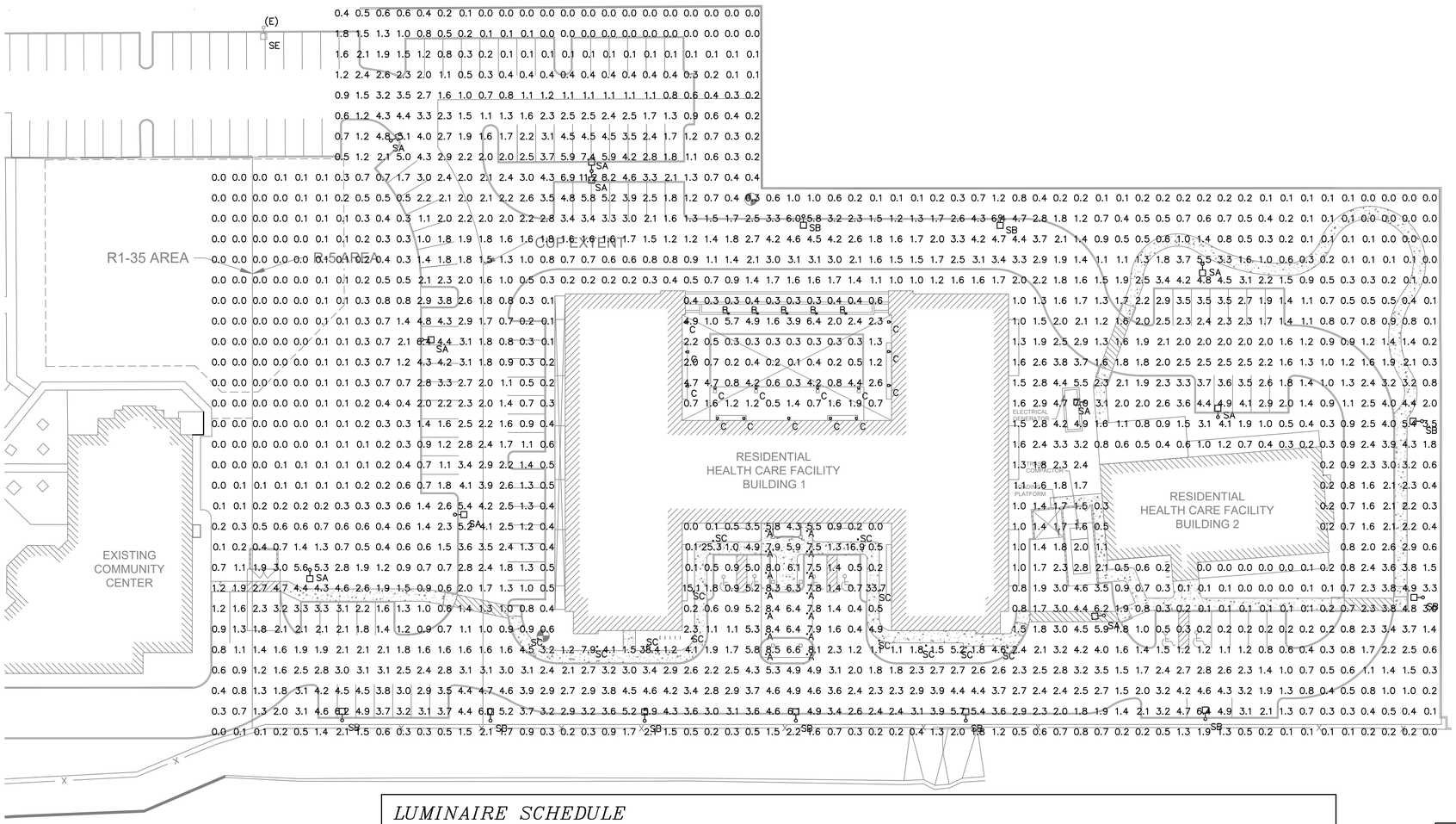

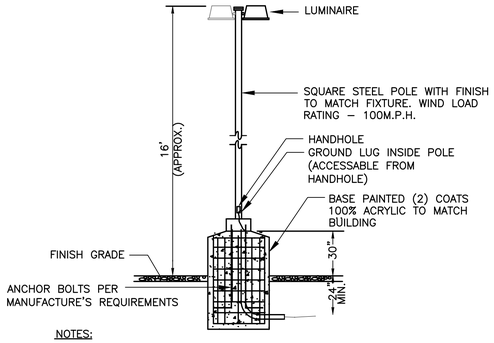

NOTES:

1. LIGHT POLE SHALL WITHSTAND 100MPH WIND FORCE WITH A 1.3 GUST FACTOR.
2. THIS POLE BASE DETAIL IS FOR ELECTRICAL SYSTEMS ONLY. THE STRUCTURAL DESIGN SHALL BE PROVIDED BY A STRUCTURAL ENGINEER.

LIGHT POLE DETAIL

N.T.S.

LUMINAIRE SCHEDULE

CALLOUT	SYMBOL	LAMP	DESCRIPTION	MOUNTING	MODEL	VOLTS	NOTE 1	QUANTITY	INPUT W
A		(1) LED	6" LED DOWN LIGHT	RECESSED	GOTHAM EVO 35 15 6AR MWD LSS	120V 1P 2W		14	18.8
B		(1) LED (INCL)	LED STEP LIGHT	RECESSED@3'	Winona Lighting, STEP13 INT 12LONG L LST2A WHT30K MVOLT LBPS	120V 1P 2W	DARK SKIES	5	11
C		(1) 16W LED(INCL)	OUTDOOR WALL SCONCE	WALL@80" TO TOP	Urban Indoor/Outdoor LED Wall Sconce BY MODERN FORMS, BRONZE, MEDIUM	120V 1P 2W	960 LUMEN, DARK SKIES	15	16
SA		(1) LED	LED POLE FIXTURE	POLE	Lithonia Lighting, KAD LED 60C 530 40K R3 MVOLT	120V 1P 2W	BRONZE, DARK SKY	10	103
SB		(1) LED	LED POLE FIXTURE	POLE	Lithonia Lighting, KAD LED 60C 530 40K R3 MVOLT	120V 1P 2W	BRONZE, HOUSE SIDE SHIELD, DARK SKY	10	103
SC		(1) LED	42" BOLLARD	POLE	RAB LIGHTING INC. BLED13N	120V 1P 2W	DARK SKY	12	15

General Photometric Schedule

AVERAGE FOOT–CANDLES	1.75
MAXIMUM FOOT–CANDLES	38.4
MINIMUM FOOT–CANDLES	0.0
MINIMUM TO MAXIMUM FC RATIO	0.00
MAXIMUM TO MINIMUM FC RATIO	3582.98
AVERAGE TO MINIMUM FC RATIO	163.60

1 SITE PHOTOMETRIC PLAN

scale: 1"= 30'

DON WITT ENGINEERING ASSOCIATES
2323 E. MINTON
MESA, AZ 85213
(480)656-0810
FAX: (480)656-0812
PROJECT# 6779

aakaii architecture + interiors
7505 e redfield rd #106 scottsdale arizona 85260
480.588.5852
aakaii.com
© 2020

MEGERDICHIAN SENIOR CENTER
8849 E. CHOLLA ST.
SCOTTSDALE, AZ 85260

PRE-CONSTRUCTION PHASE

NO.	ISSUED FOR:	DATE
	REZONING & C.U.P.	12-13-2018
	REZONING & C.U.P. 2nd Review	08-03-2020

CONSTRUCTION PHASE

REV.	BULLETIN #	DATE

Registered Professional Engineer (Electrical) CERTIFICATE NO. 41025 DON E. WITT 4-9-20 ARIZONA U.S.A. EXPIRES 6/30/2022

SHEET TITLE

SCALE:
DATE: 08/03/2020
JOB NUMBER: 1727-00

PH1.0

PLOT DATEWednesday, September 9, 2020 2:55:49 PM

THESE PROJECT DOCUMENTS ARE THE PROPERTY OF AAK ARCHITECTURE & INTERIORS, INC. NO PART OF THESE DOCUMENTS SHALL BE REPRODUCED OR USED WITHOUT THE WRITTEN PERMISSION OF THE AUTHORS. COPYRIGHT © 2020 AAK ARCHITECTURE & INTERIORS

25-ZN-2018
25_ZN_2018#203
12/15/2020