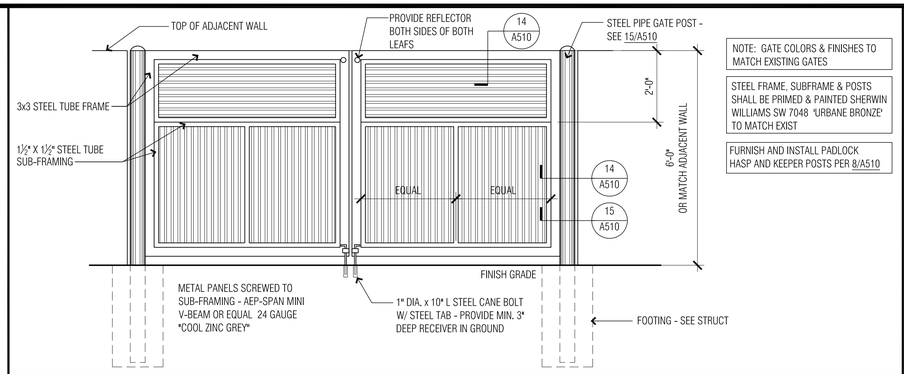

NOTE: GATE COLORS & FINISHES TO MATCH EXISTING GATES

STEEL FRAME, SUBFRAME & POSTS SHALL BE PRIMED & PAINTED SHERWIN WILLIAMS SW 7048 'URBANE BRONZE' TO MATCH EXIST

FURNISH AND INSTALL PADLOCK HASP AND KEEPER POSTS PER 8/A510

13 6'-0" GATE - PUBLIC SIDE

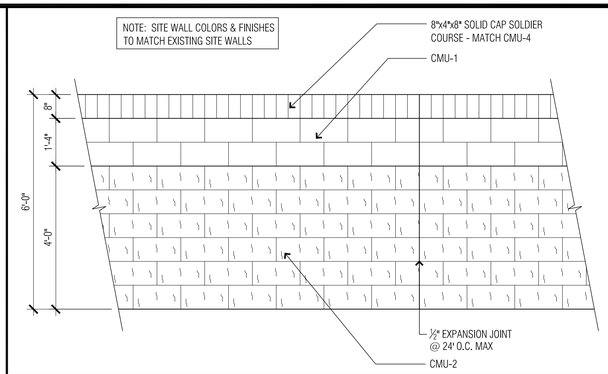

SYM.	MATERIAL DESCRIPTION	
CMU-1	MATERIAL:	INTEGRAL COLOR CMU
	MANUF:	SUPERLITE
	PRODUCT:	8"X8"X16"
	COLOR:	'COCOA BROWN' 62.13.3 (MATCH EXIST)
CMU-2	MATERIAL:	INTEGRAL COLOR SPLIT-FACE CMU
	MANUF:	SUPERLITE
	PRODUCT:	8"X8"X16"
	COLOR:	'BLACK' 62.55.3 (MATCH EXISTING)
CMU-4	MATERIAL:	INTEGRAL COLOR CMU
	MANUF:	SUPERLITE
	PRODUCT:	8"X4"X16"
	COLOR:	'PEACH' 62.16.3 (MATCH EXISTING)

5 6'-0" HIGH CMU SCREEN WALL

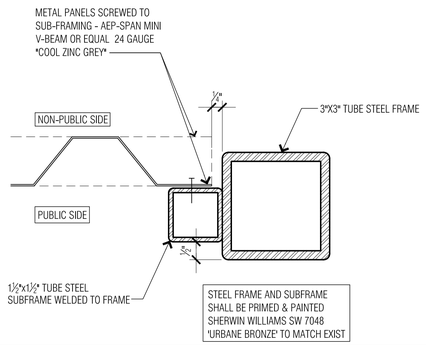

14 GATE FRAME

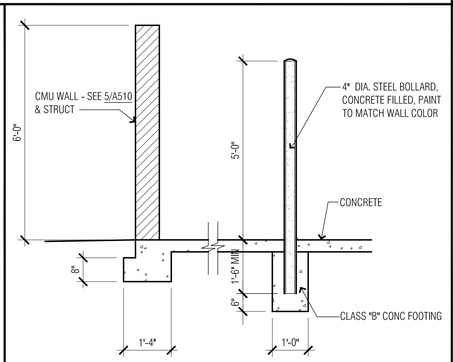

10 REFUSE BOLLARD DETAIL

NOTE: SITE WALL COLORS & FINISHES TO MATCH EXISTING SITE WALLS

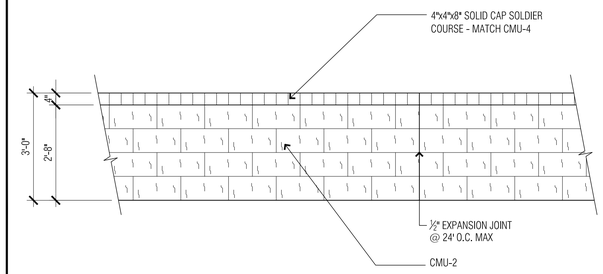

SYM.	MATERIAL DESCRIPTION	
CMU-2	MATERIAL:	INTEGRAL COLOR SPLIT-FACE CMU
	MANUF:	SUPERLITE
	PRODUCT:	8"X8"X16"
	COLOR:	'BLACK' 62.55.3 (MATCH EXISTING)
CMU-4	MATERIAL:	INTEGRAL COLOR CMU
	MANUF:	SUPERLITE
	PRODUCT:	8"X4"X16"
	COLOR:	'PEACH' 62.16.3 (MATCH EXISTING)

6 3'-0" HIGH CMU SCREEN WALL

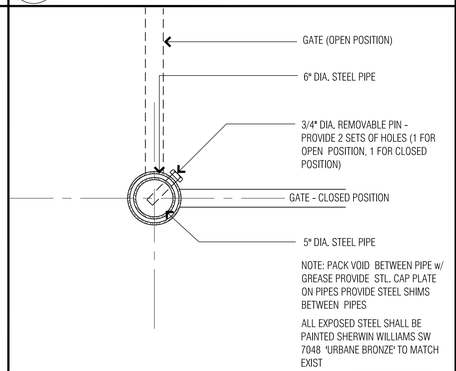

15 GATE POST

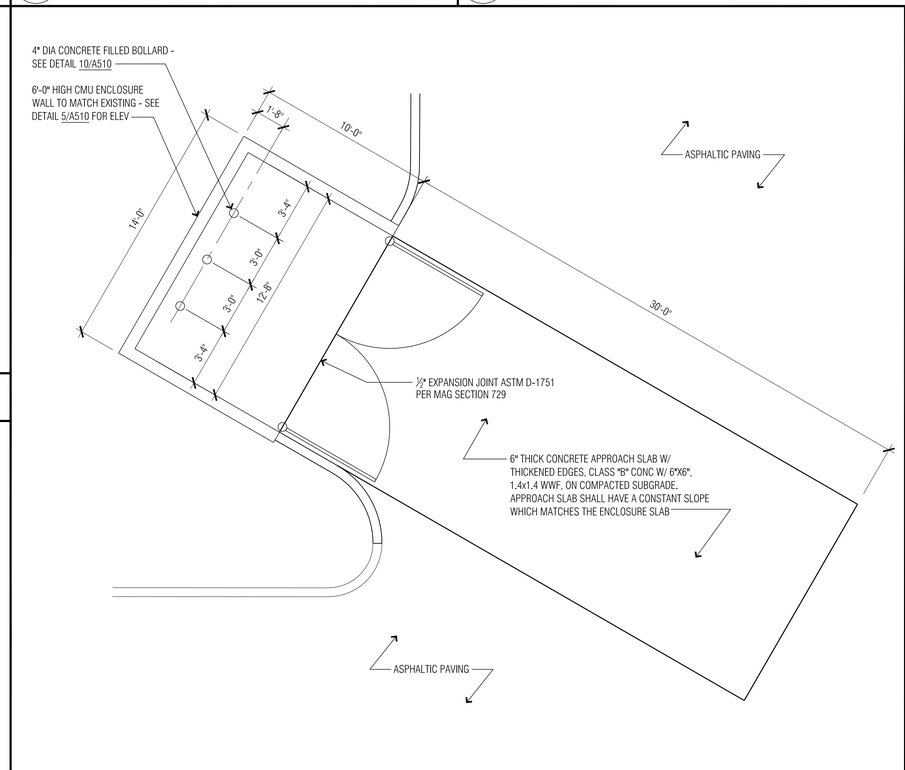

12 REFUSE YARD PLAN DETAIL

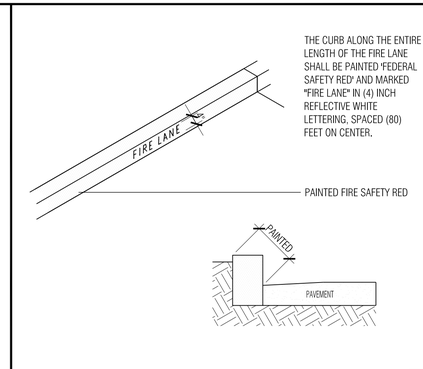

3 FIRE LANE CURB

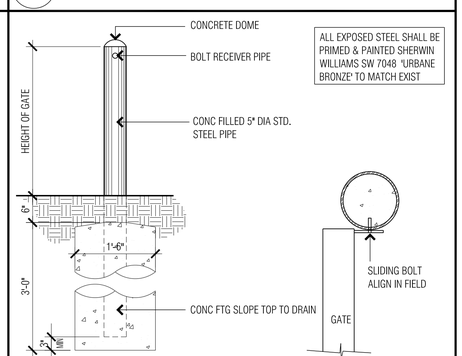

16 GATE KEEPER POST

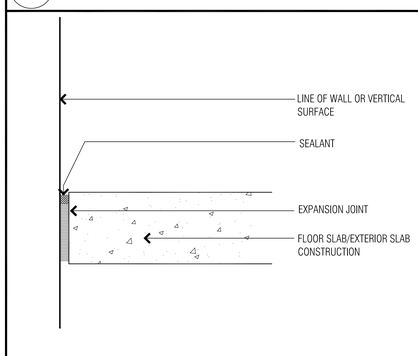

4 SIDEWALK AT VERT WALL

JOHN MAHONEY ARCHITECT
850 W. ELLIOT ROAD #108
TEMPE, ARIZONA 85284
P 480.345.8457 F 480.345.1759

PRELIMINARY ONLY NOT FOR CONSTRUCTION

GENESIS

Genesis North Scottsdale Service Building

8445 E. FRANK LLOYD WRIGHT BLVD, SCOTTSDALE, ARIZONA

PROJECT NO.: 2009

ISSUE DATE: 2/1/23

SITE DETAILS

A510