RAN Template:	A&L Template:
56790EZ_SR_T	56790EZ_SR_T

PH68045A_Coverage Strategy_1

Print Name: Standard
PORs: Coverage Strategy_Regional Coverage

Section 1 - Site Information

Site ID: PH68045A
Status: Final
Version: 1
Project Type: Coverage Strategy
Approved: 10/19/2021 4:42:49 PM
Approved By: MOUNA.NUCHIMANIANDA@T-MOBILE.COM
Last Modified: 10/19/2021 4:42:49 PM
Last Modified By: MOUNA.NUCHIMANIANDA@T-MOBILE.COM

Site Name: Crown Desert Foothills
Site Class: Tree
Site Type: Structure Non Building
Plan Year: 2021
Market: PHOENIX AZ
Vendor: Nokia
Landlord: Not Specified

Latitude: 33.75350000
Longitude: -111.92370000
Address: 29505 N. Scottsdale Rd.
City, State: Scottsdale, AZ
Region: WEST

RAN Template: 56790EZ_SR_T			AL Template: 56790EZ_SR_T	
Sector Count: 3	**Antenna Count:** 6	**Coax Line Count:** 0	**TMA Count:** 0	**RRU Count:** 6

Section 2 - Existing Template Images

----- This section is intentionally blank. -----

6-UP-2022
10/24/22

Section 3 - Proposed Template Images

56790EZ_SR_T.jpg

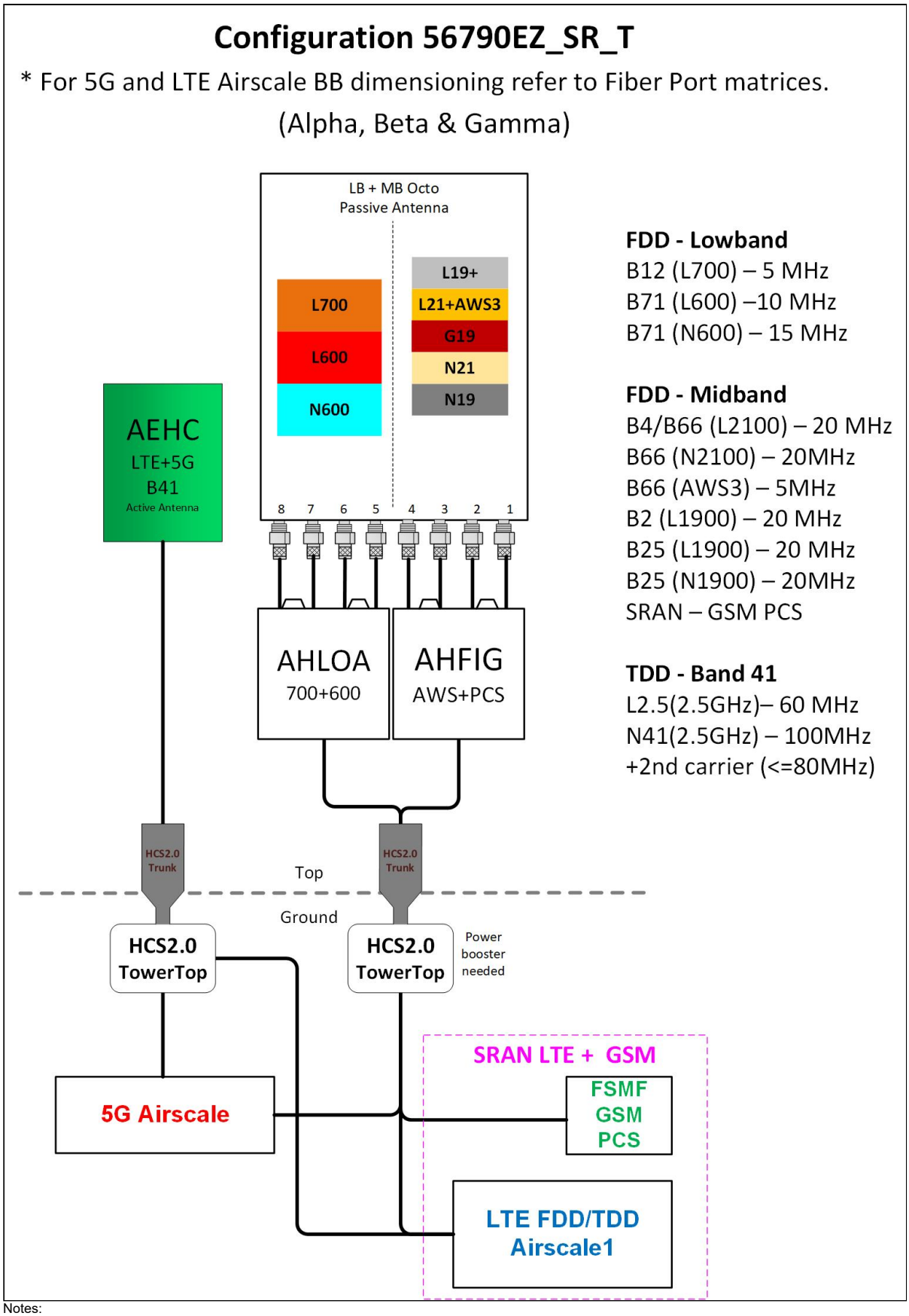

Notes:

50090EZ_SR_T.jpg

6-UP-2022
10/24/22

Configuration 50090EZ_SR_T

* For 5G and LTE Airscale BB dimensioning refer to Fiber Port matrices.
(Alpha, Beta & Gamma)

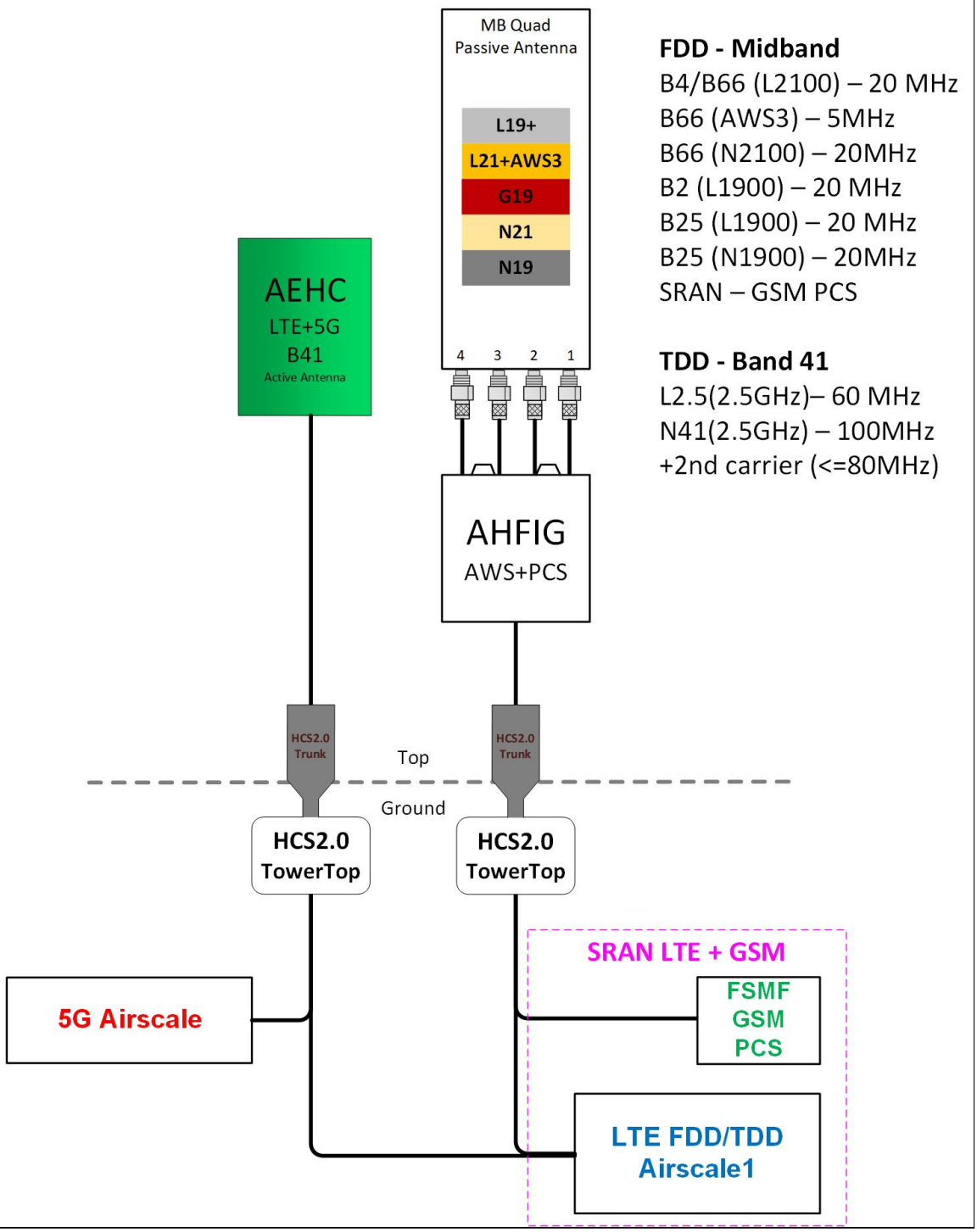

FDD - Midband
B4/B66 (L2100) – 20 MHz
B66 (AWS3) – 5MHz
B66 (N2100) – 20MHz
B2 (L1900) – 20 MHz
B25 (L1900) – 20 MHz
B25 (N1900) – 20MHz
SRAN – GSM PCS

TDD - Band 41
L2.5(2.5GHz)– 60 MHz
N41(2.5GHz) – 100MHz
+2nd carrier (<=80MHz)

Notes:

Section 4 - Siteplan Images

----- This section is intentionally blank. -----

6-UP-2022
10/24/22

RAN Template:	A&L Template:
56790EZ_SR_T	56790EZ_SR_T

PH68045A_Coverage Strategy_1

Print Name: Standard
PORs: Coverage Strategy_Regional Coverage

Section 5 - RAN Equipment

Existing RAN Equipment

----- This section is intentionally blank. -----

Proposed RAN Equipment

Template: 56790EZ_SR_T

Enclosure	1	2	3	4
Enclosure Type	Purcell HPL3 600A DC plant	Tower Top Mount (Nokia)	Ancillary Equipment (Nokia)	Purcell LB3 Battery Cabinet (4 strings)
Baseband	ASIB L700 L600 L2100 L1900 LAWS3 ASIK N2500 ASIK N600 N2100 N1900 ASIB L2500 FSMF U1900			
Baseband Submodule	ABIA **(x 2)** L2100 L1900 LAWS3 ABIA L700 L600 ABIL **(x 3)** N2500 ABIL N600 ABIC **(x 3)** L2500 ABIL **(x 2)** N2100 N1900			
Baseband Subrack	AMIA **(x 2)**			
Hybrid Cable System	Voltage Booster needed if hybrid under 250' Extra Booster Amplifier needed if hybrid under 250'		100' HCS 2.0 Trunk - 12#6AWG 24 SM FIBER PR **(x 2)** 15' HCS 2.0 Jumper Cable - 10AWG 2PR Airscale **(x 3)** 15' HCS 2.0 Jumper Cable - 2x6AWG 2PR AHFIG **(x 3)** 15' HCS 2.0 Jumper Cable - 2x6AWG 4PR AEHC **(x 3)**	
Junction Box			Nokia HCS 2.0 Tower Junction Box **(x 2)**	
Power subsystem	Rectifier Shelf *Select size* Breakers *Select size*			Batteries *Select size*
Radio		AHLOA **(x 3)** L700 L600 N600 AHFIG **(x 3)** L2100 L1900 LAWS3 N2100 N1900 U1900		
Transport System	CSR IXRe V2 (Gen2)			

RAN Scope of Work:

6-UP-2022
10/24/22

RAN Template:	A&L Template:
56790EZ_SR_T	56790EZ_SR_T

PH68045A_Coverage Strategy_1

Print Name: Standard
PORs: Coverage Strategy_Regional Coverage

Section 6 - A&L Equipment

Existing Template: Custom
Proposed Template: 56790EZ_SR_T

Sector 1 (Proposed) view from front (Note: the images show view from behind)

Coverage Type	A - Outdoor Macro				
Antenna	1				2
Antenna Model	Commscope - FFVV-65C-R3-V1 (Octo)				AEHC (Active Antenna - Massive MIMO)
Azimuth	0				0
M. Tilt	0				0
Height	60				60
Ports	P1	P2	P3	P4	P5
Active Tech.	L700 L600 N600	L700 L600 N600	L2100 L1900 LAWS3 N2100 N1900 U1900	L2100 L1900 LAWS3 N2100 N1900 U1900	L2500 N2500
Dark Tech.					
Restricted Tech.					
Decomm. Tech.					
E. Tilt					
Cables	JUMPER 15 FT SUREFLEX 4.3-10 TO 4.3-10 **(x8)**	SHARED JUMPER 15 FT SUREFLEX 4.3-10 TO 4.3-10 **(x8)**	SHARED JUMPER 15 FT SUREFLEX 4.3-10 TO 4.3-10 **(x8)**	SHARED JUMPER 15 FT SUREFLEX 4.3-10 TO 4.3-10 **(x8)**	
TMAs					
Diplexers / Combiners					
Radio					
Sector Equipment					

Unconnected Equipment:

Scope of Work:

*A dashed border indicates shared equipment. Any connected equipment is denoted with the SHARED keyword.

6-UP-2022
10/24/22

RAN Template:	A&L Template:
56790EZ_SR_T	56790EZ_SR_T

PH68045A_Coverage Strategy_1

Print Name: Standard
PORs: Coverage Strategy_Regional Coverage

Sector 2 (Proposed) view from front (Note: the images show view from behind)

Coverage Type	A - Outdoor Macro				
Antenna	1				2
Antenna Model	Commscope - FFVV-65C-R3-V1 (Octo)				AEHC (Active Antenna - Massive MIMO)
Azimuth	120				120
M. Tilt	0				0
Height	60				60
Ports	P1	P2	P3	P4	P5
Active Tech.	L700 L600 N600	L700 L600 N600	U1900 L2100 L1900 LAWS3 N2100 N1900	U1900 L2100 L1900 LAWS3 N2100 N1900	L2500 N2500
Dark Tech.					
Restricted Tech.					
Decomm. Tech.					
E. Tilt					
Cables	JUMPER 15 FT SUREFLEX 4.3-10 TO 4.3-10 **(x8)**	SHARED JUMPER 15 FT SUREFLEX 4.3-10 TO 4.3-10 **(x8)**	SHARED JUMPER 15 FT SUREFLEX 4.3-10 TO 4.3-10 **(x8)**	SHARED JUMPER 15 FT SUREFLEX 4.3-10 TO 4.3-10 **(x8)**	
TMAs					
Diplexers / Combiners					
Radio					
Sector Equipment					

Unconnected Equipment:

Scope of Work:

*A dashed border indicates shared equipment. Any connected equipment is denoted with the SHARED keyword.

6-UP-2022
10/24/22

RAN Template:	A&L Template:
56790EZ_SR_T	56790EZ_SR_T

PH68045A_Coverage Strategy_1

Print Name: Standard
PORs: Coverage Strategy_Regional Coverage

Sector 3 (Proposed) view from front (Note: the images show view from behind)

Coverage Type	A - Outdoor Macro				
Antenna	1				2
Antenna Model	Commscope - FFVV-65C-R3-V1 (Octo)				AEHC (Active Antenna - Massive MIMO)
Azimuth	240				240
M. Tilt	0				0
Height	60				60
Ports	P1	P2	P3	P4	P5
Active Tech.	L700 L600 N600	L700 L600 N600	U1900 L2100 L1900 LAWS3 N2100 N1900	U1900 L2100 L1900 LAWS3 N2100 N1900	L2500 N2500
Dark Tech.					
Restricted Tech.					
Decomm. Tech.					
E. Tilt					
Cables	JUMPER 15 FT SUREFLEX 4.3-10 TO 4.3-10 **(x8)**	SHARED JUMPER 15 FT SUREFLEX 4.3-10 TO 4.3-10 **(x8)**	SHARED JUMPER 15 FT SUREFLEX 4.3-10 TO 4.3-10 **(x8)**	SHARED JUMPER 15 FT SUREFLEX 4.3-10 TO 4.3-10 **(x8)**	
TMAs					
Diplexers / Combiners					
Radio					
Sector Equipment					

Unconnected Equipment:

Scope of Work:

*A dashed border indicates shared equipment. Any connected equipment is denoted with the SHARED keyword.

6-UP-2022
10/24/22

RAN Template:	A&L Template:
56790EZ_SR_T	56790EZ_SR_T

PH68045A_Coverage Strategy_1

Print Name: Standard
PORs: Coverage Strategy_Regional Coverage

Section 7 - Power Systems Equipment

Existing Power Systems Equipment

----- This section is intentionally blank. -----

Proposed Power Systems Equipment

6-UP-2022
10/24/22