CAUTION: IF THIS SHEET IS NOT 24"x36" IT IS A REDUCED PRINT

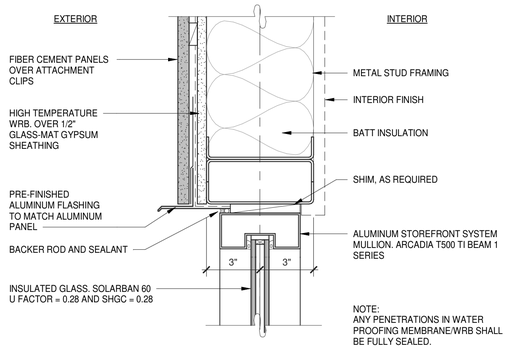

STOREFRONT GLAZING HEAD (7)

SCALE: 3" = 1'-0"

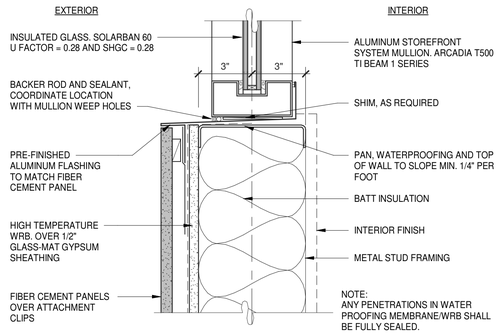

STOREFRONT GLAZING SILL (8)

SCALE: 3" = 1'-0"

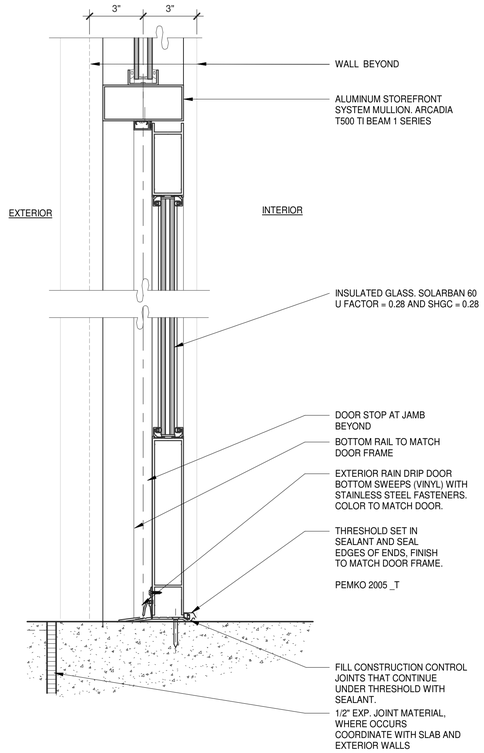

STOREFRONT DOOR (4)

SCALE: 3" = 1'-0"

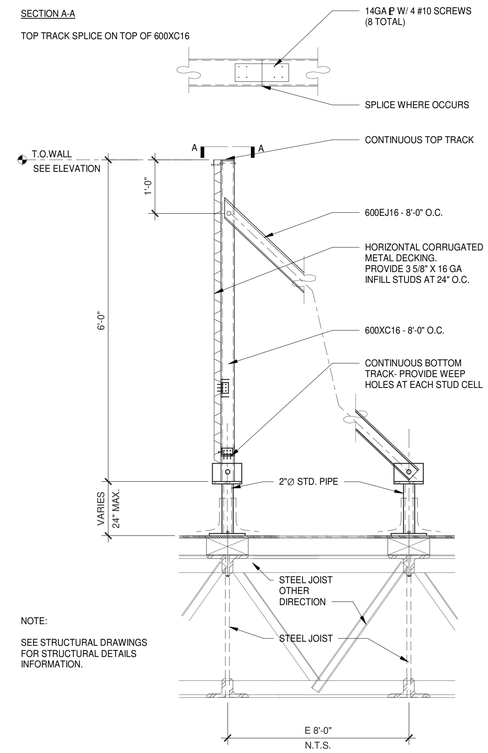

N.T.S.

MECHANICAL SCREEN WALL (1)

SCALE: 3/4" = 1'-0"

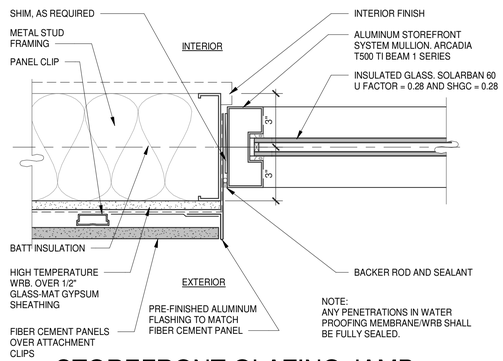

STOREFRONT GLAZING JAMB (9)

SCALE: 3" = 1'-0"

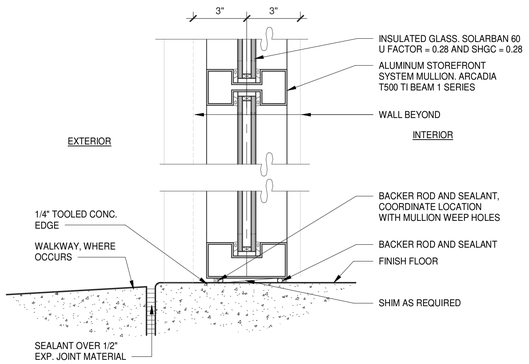

WINDOW SILL (5)

SCALE: 3" = 1'-0"

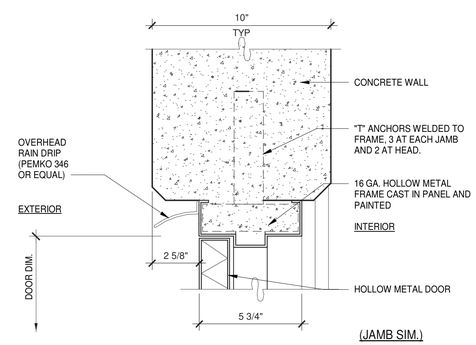

HOLLOW METAL DOOR HEAD (2)

SCALE: 3" = 1'-0"

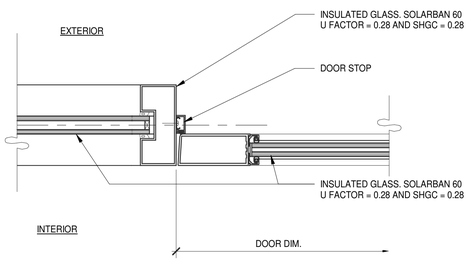

STOREFRONT DOOR JAMB (6)

SCALE: 3" = 1'-0"

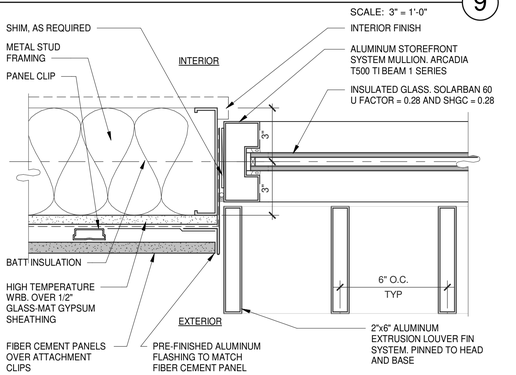

STOREFRONT GLAZING W/LOUVERS (10)

SCALE: 3" = 1'-0"

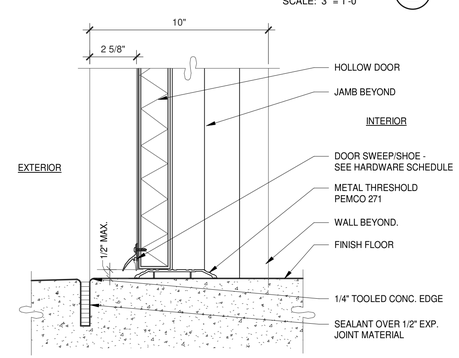

HOLLOW METAL DOOR SILL (3)

SCALE: 3" = 1'-0"

WARE MALCOMB
ARCHITECTURE CIVIL ENGINEERING
PLANNING BRANDING
INTERIORS BUILDING MEASUREMENT
2777 E. Camelback Rd. Suite #325
Phoenix, AZ. 85016
P 480.767.1001

SKYPORT AT REDFIELD HANGARS

7600 E. REDFIELD RD
SCOTTSDALE AZ 85260

DOOR & WINDOW DETAILS

DATE	REMARKS

PA/PM:	D. RICHARDSON
DRAWN BY.:	EL
JOB NO.:	PHX24-0033-00

SHEET 045f

XX/XX/XXXX - PROGRESS CHECK

6/17/2024 10:42:06 AM

THESE DRAWINGS AND SPECIFICATIONS ARE THE PROPERTY AND COPYRIGHT OF WARE MALCOMB AND SHALL NOT BE USED ON ANY OTHER WORK EXCEPT BY AGREEMENT WITH WARE MALCOMB. WRITTEN DIMENSIONS SHALL TAKE PRECEDENCE OVER SCALED DIMENSIONS AND SHALL BE VERIFIED ON THE JOB SITE. ANY DISCREPANCY SHALL BE BROUGHT TO THE NOTICE OF WARE MALCOMB PRIOR TO THE COMMENCEMENT OF ANY WORK.

W:\PHX24\0033\00\Architectural\Revit\7600 E Redfield Rd_ARCH.rvt