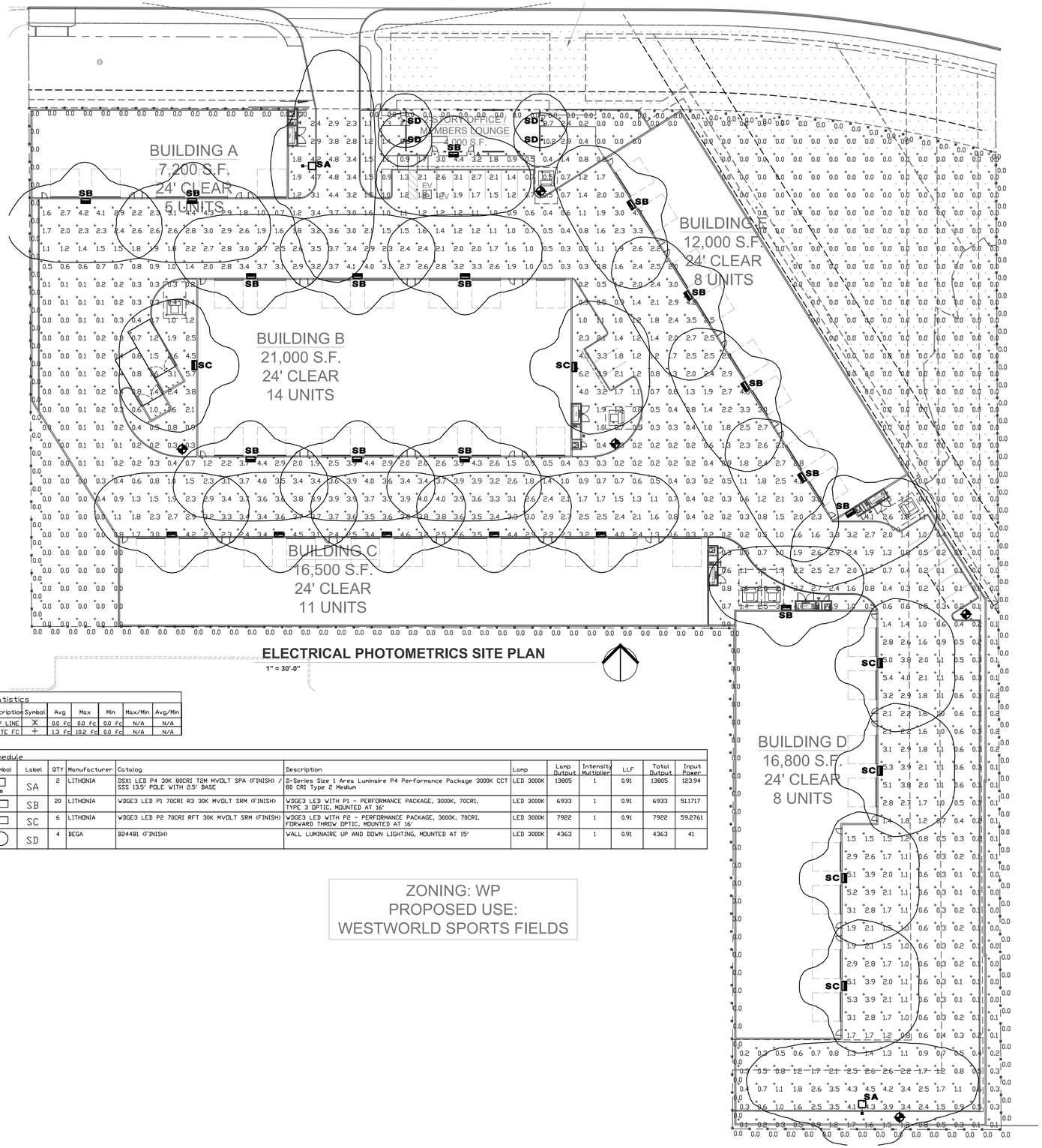

ELECTRICAL PHOTOMETRICS SITE PLAN

1" = 30'-0"

Statistics						
Description	Symbol	Avg	Max	Min	Max/Min	Avg/Min
PROP LINE	X	0.0 fc	0.0 fc	0.0 fc	N/A	N/A
ONSITE FC	+	1.3 fc	10.2 fc	0.0 fc	N/A	N/A

Schedule											
Symbol	Label	QTY	Manufacturer	Catalog	Description	Lamp	Lamp Output	Intensity Multiplier	LLF	Total Output	Input Power
	SA	2	LITHONIA	DSX1 LED P4 30K 80CRI T2M MVOLT SPA (FINISH) / SSS 13.5' POLE WITH 2.5' BASE	D-Series Size 1 Area Luminaire P4 Performance Package 3000K CCT 80 CRI Type 2 Medium	LED 3000K	13805	1	0.91	13805	123.94
	SB	20	LITHONIA	WDGE3 LED P1 70CRI R3 30K MVOLT SRM (FINISH)	WDGE3 LED WITH P1 - PERFORMANCE PACKAGE, 3000K, 70CRI, TYPE 3 OPTIC, MOUNTED AT 16'	LED 3000K	6933	1	0.91	6933	51.1717
	SC	6	LITHONIA	WDGE3 LED P2 70CRI RFT 30K MVOLT SRM (FINISH)	WDGE3 LED WITH P2 - PERFORMANCE PACKAGE, 3000K, 70CRI, FORWARD THROW OPTIC, MOUNTED AT 16'	LED 3000K	7922	1	0.91	7922	59.2761
	SD	4	BEGA	B24481 (FINISH)	WALL LUMINAIRE UP AND DOWN LIGHTING, MOUNTED AT 15'	LED 3000K	4363	1	0.91	4363	41

ZONING: WP
PROPOSED USE:
WESTWORLD SPORTS FIELDS

DESIGN CODES
IECC: 2018 NEC: 2017

ELECTRICAL CONTRACTOR SHALL NOTIFY DESIGNER/ENGINEER PRIOR TO ANY DEVIATION FROM THIS SET OF ELECTRICAL DESIGN PLANS. ANY CHANGES TO THE DESIGN, IF APPROVED BY ENGINEER, WILL REQUIRE REVISIONS TO PLANS AND POSSIBLE ADDITIONAL SERVICE FEE.

Project Contact/Designer: MINDY ADLER
Project # 24316
HAWKINS DESIGN GROUP INC.
ELECTRICAL CONSULTING ENGINEERS
1140 WEST HARWELL ROAD
GILBERT, ARIZONA 85233
PH. 480.813.9000 FAX. 480.813.9001
EMAIL. email@hawkinsdg.com

All concepts, designs and data indicated on these drawings are the sole property of the Hawkins Design Group Inc., and shall not be used for any other purpose other than originally intended without written permission of the engineer.

IF DRAWING IS NOT PLOTTED AT 24 X 36 THEY ARE NOT FULL SIZE

LGE | DESIGNBUILD
1200 N. 52nd Street ▪ Phoenix, AZ ▪ 85008
P: 480.966.4001

COLLECTOR'S GARAGE AT WESTWORLD

10405 E MCDOWELL MTN RANCH RD

SCOTTSDALE, AZ 85255

CREATION

NUMBER	REVISION	DATE

PRELIMINARY NOT FOR CONSTRUCTION
Expires: XX/XX/XX

SHEET TITLE:
SITE PHOTOMETRICS

ISSUE DATE: 09/23/24

DRAWN BY:

CHECKED BY:

PROJECT No.:

SHEET:
DR1.0

REZONE SUBMITTAL 09/23/24

FIXTURE TYPE: "SA"

D-Series Size 2
LED Area Luminaire

Catalog Number	
Notes	
Type	

Hit the Tab key or mouse over the page to see all interactive elements.

Introduction

The modern styling of the D-Series features a highly refined aesthetic that blends seamlessly with its environment. The D-Series offers the benefits of the latest in LED technology into a high performance, high efficacy, long-life luminaire.

The outstanding photometric performance results in sites with excellent uniformity, greater pole spacing and lower power density. D-Series outstanding photometry aids in reducing the number of poles required in area lighting applications with typical energy savings of up to 80% vs. 1000W HID and expected service life of over 100,000 hours.

Specifications

EPA:	1.06 ft² (0.10 m²)
Length:	40.59" (103.1 cm)
Width:	16.76" (42.6 cm)
Height H1:	8.11" (20.6 cm)
Height H2:	3.96" (10.1 cm)
Weight:	46 lbs (20.9 kg)

Design Select options indicated by this color background.

design select — Items marked by a shaded background qualify for the Design Select program and ship in 15 days or less. To learn more about Design Select, visit www.acuitybrands.com/designselect. *See ordering tree for details

Ordering Information

EXAMPLE: DSX2 LED P7 40K 70CRI T3M MVOLT SPA NLTAIR2 PIRHN DDBXD

[illegible]

Control options / Other options / Finish [illegible]

Ordering Information

Accessories

[illegible]

NOTES [illegible]

Shield Accessories

External Glare Shield (EGSR)

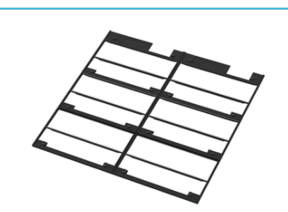

House Side Shield (HS)

Drilling

HANDHOLE ORIENTATION

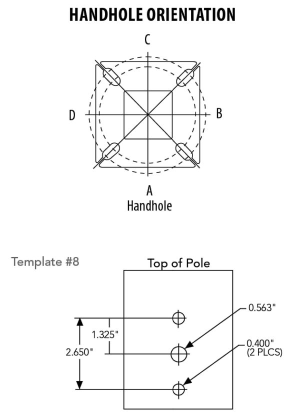

Tenon Mounting Slipfitter [illegible]

DSX2 Area Luminaire - EPA [illegible]

FIXTURE TYPE: "SB"/"SC"

WDGE3 LED
Architectural Wall Sconce

Catalog Number	
Notes	
Type	

Hit the Tab key or mouse over the page to see all interactive elements.

Introduction

The WDGE LED family is designed to meet specifier's every wall-mounted lighting need in a widely accepted shape that blends with any architecture. The clean rectilinear design comes in four sizes with lumen packages ranging from 1,200 to 25,000 lumens, providing a true site-wide solution. Embedded with nLight® AIR wireless controls, the WDGE family provides additional energy savings and code compliance.

WDGE3 has been designed to deliver up to 12,000 lumens through a precision refractive lens with wide distribution, perfect for augmenting the lighting from pole mounted luminaires.

Specifications

Depth (D1):	8"
Depth (D2):	1.5"
Height:	9"
Width:	18"
Weight: (without options)	19.5 lbs

design select — Items marked by a shaded background qualify for the Design Select program and ship in 15 days or less. To learn more about Design Select, visit www.acuitybrands.com/designselect. *See ordering tree for details

WDGE LED Family Overview

Luminaire	Optics	Standard EM, 0°C	Cold EM, -20°C	Sensor	Approximate Lumens (4000K, 80CRI) P0	P1	P2	P3	P4	P5	P6
WDGE1 LED	Visual Comfort	4W		--	750	1,200	2,000	--	--	--	--
WDGE2 LED	Visual Comfort	10W	18W	Standalone / nLight	--	1,200	2,000	3,000	4,500	6,000	--
WDGE2 LED	Precision Refractive	10W	18W	Standalone / nLight	700	1,200	2,000	3,200	4,200	--	--
WDGE3 LED	Precision Refractive	15W	18W	Standalone / nLight	6,000	7,500	8,500	10,000	12,000	--	--
WDGE4 LED	Precision Refractive	--	--	Standalone / nLight	--	12,000	16,000	18,000	20,000	22,000	25,000

Ordering Information

EXAMPLE: WDGE3 LED P3 40K 70CRI R3 MVOLT SRM DDBXD

[illegible]

Options / Finish [illegible]

Accessories [illegible]

NOTES [illegible]

Performance Data

Lumen Output

[illegible]

Lumen Output in Emergency Mode (4000K, 70 CRI)

[illegible]

Electrical Load

[illegible]

Lumen Multiplier for 80CRI

CCT	Multiplier
30K	0.891
40K	0.906
50K	0.906

Lumen Ambient Temperature (LAT) Multipliers

Ambient		Lumen Multiplier
0°C	32°F	1.05
10°C	50°F	1.03
20°C	68°F	1.01
25°C	77°F	1.00
30°C	86°F	0.99
40°C	104°F	0.97

Projected LED Lumen Maintenance

Operating Hours	0	25,000	50,000	100,000
Lumen Maintenance Factor	1.0	>0.98	>0.97	>0.92

FIXTURE TYPE: "SD"

Wall luminaire · Very wide beam in both directions — **BEGA**

Application
Designed for accent lighting of columns, walls, and facades. The symmetric very wide beam distributions are ideal for general illumination of pathways and corridors, while highlighting architectural features and producing patterns of light on the installation surface.

Materials
Clear safety glass with matte finish
Marine grade, copper free (≤0.3% copper content) A360.0 aluminum alloy
Silicone applied robotically to casting, plasma treated for increased adhesion
Stainless steel mounting plate
Pure anodized aluminum reflector surface

NRTL listed to North American Standards, suitable for wet locations
Protection class IP 65

Weight: 8.2 lbs.

Electrical

Operating voltage	120-277V AC
Minimum start temperature	-30°C
Maximum ambient temperature	40°C
LED module wattage	35.4 W
System wattage	41.0 W
Controllability	0-10V, TRIAC, and ELV dimmable
Color rendering index	Ra > 90
Luminaire lumens	4368 lm
LED service life (L70)	60000 hrs

LED color temperature
☐ 4000K (K4)
☐ 3500K (K35)
☐ 3000K (K3)
☐ 2700K (K27)

BEGA can supply you with suitable LED replacement modules for up to 20 years after the purchase of LED luminaires - see website for details

Finish
All BEGA standard finishes are matte, textured powder coat with minimum 3 mil thickness. BEGA Unidure® finish, a fluoropolymer technology, provides superior fade protection in Black, Bronze, and Silver. BEGA standard White is a super durable polyester powder. Optionally available RAL and custom color finishes provided in either polyester powder or liquid paint.

Available colors
☐ Black (BLK) ☐ Bronze (BRZ)
☐ Silver (SLV) ☐ White (WHT)
☐ RAL: ☐ CUS:

Type:
BEGA Product:
Project:
Modified:

Available options
☐ CUS Custom finish
☐ DALI-2 Digital addressable lighting interface
☐ FSC Fusing
☐ MGU Marine grade undercoat
☐ RAL RAL finish

Included (available for pre-shipment)
☐ B19542 Narrow opening wiring box

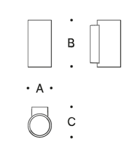

Wall luminaire · Very wide beam in both directions

	LED	☐	A	B	C
B24481	35.4 W	70°	5 3/4	9 1/4	7 1/2

BEGA 1000 BEGA Way, Carpinteria, CA 93013 (805) 684-0533 info@bega-us.com

Due to the dynamic nature of lighting products and the associated technologies, luminaire data on this sheet is subject to change at the discretion of BEGA North America. For the most current technical data, please refer to bega-us.com
© copyright BEGA 2024 Updated 08/20/24

POLE MOUNTED FIXTURE DETAIL

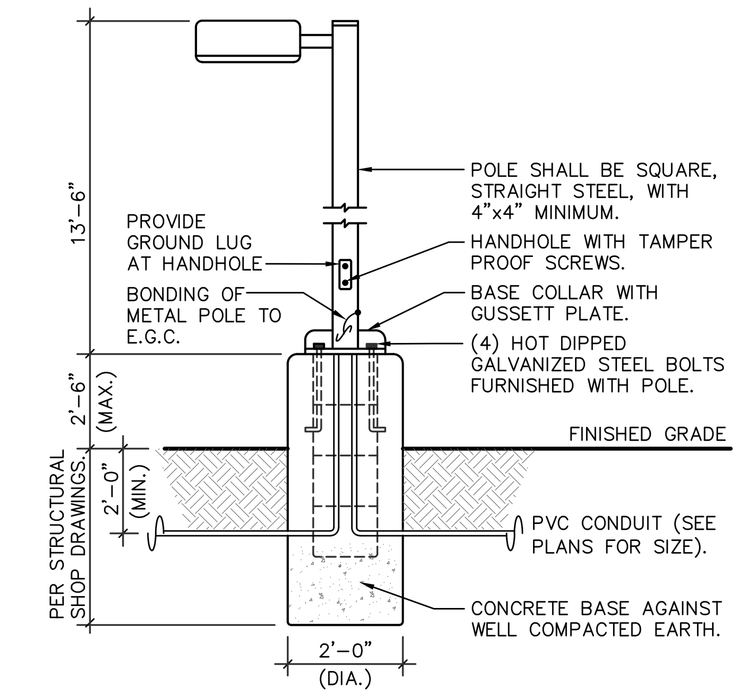

FIXTURE TYPE "SA"

THE POLE CONCRETE BASE DETAIL IS SHOWN FOR ELECTRICAL ROUGH-IN AND SHALL NOT BE USED FOR THE ACTUAL BASE CONSTRUCTION. POLE BASE SHALL BE DESIGNED BY A REGISTERED STRUCTURAL PROFESSIONAL ENGINEER AND CONSTRUCTED PER STRUCTURAL ENGINEERS SEALED CONSTRUCTION DOCUMENT.

NOTE: ELECTRICAL CONTRACTOR SHALL BOND METAL POLE PER NEC 410.30(B)(5) AS SHOWN IN DETAIL.

DESIGN CODES
IECC: 2018 NEC: 2017

ELECTRICAL CONTRACTOR SHALL NOTIFY DESIGNER/ENGINEER PRIOR TO ANY DEVIATION FROM THIS SET OF ELECTRICAL DESIGN PLANS. ANY CHANGES TO THE DESIGN, IF APPROVED BY ENGINEER, WILL REQUIRE REVISIONS TO PLANS AND POSSIBLE ADDITIONAL SERVICE FEE.

Project Contact/Designer: MINDY ADLER
Project # 24316
HAWKINS DESIGN GROUP INC.
ELECTRICAL CONSULTING ENGINEERS
1140 WEST HARWELL ROAD
GILBERT, ARIZONA 85233
PH. 480.813.9000 FAX. 480.813.9001
EMAIL. email@hawkinsdg.com

All concepts, designs and data indicated on these drawings are the sole property of the Hawkins Design Group Inc., and shall not be used for any other purpose other than originally intended without written permission of the engineer.

IF DRAWING IS NOT PLOTTED AT 24 X 36 THEY ARE NOT FULL SIZE

LGE | DESIGNBUILD
1200 N. 52nd Street ■ Phoenix, AZ ■ 85008
P: 480.966.4001

COLLECTOR'S GARAGE AT WESTWORLD
10405 E MCDOWELL MTN RANCH RD
SCOTTSDALE, AZ 85255

CREATION

NUMBER	REVISION	DATE

PRELIMINARY NOT FOR CONSTRUCTION — Expires: XX/XX/XX

SHEET TITLE: CUT SHEETS
ISSUE DATE: 09/23/24
DRAWN BY:
CHECKED BY:
PROJECT No.:
SHEET: DR2.0

REZONE SUBMITTAL 09/23/24