TYPICAL SPACE DIMENSIONS

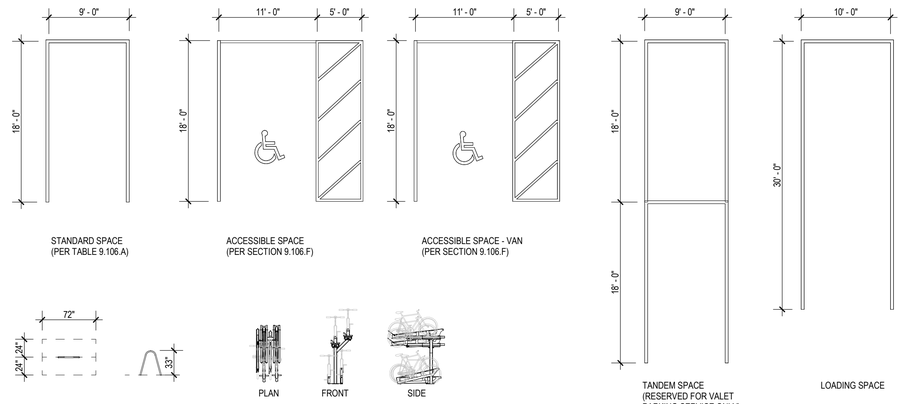

EV-CHARGING CAPABLE PARKING SPACE - INFRASTRUCTURE FOR FUTURE CHARGING STATION INSTALLATION

EV-CHARGING INSTALLED PARKING SPACE - CHARGING STATION PROVIDED

PARKING COUNT

SPACE TYPE	QUANTITY
LEVEL P2	
ACCESSIBLE PARKING SPACE	4
STANDARD PARKING SPACE	115
TANDEM PARKING SPACE	8
127	
LEVEL P1	
ACCESSIBLE PARKING SPACE	4
ACCESSIBLE PARKING SPACE - VAN	4
STANDARD PARKING SPACE	135
TANDEM PARKING SPACE	12
155	
LEVEL 1 (+1279.00')	
VALET PARKING SPACE	9
9	
LEVEL 2	
ACCESSIBLE PARKING SPACE	4
STANDARD PARKING SPACE	46
TANDEM PARKING SPACE	26
76	
LEVEL 3	
ACCESSIBLE PARKING SPACE	4
STANDARD PARKING SPACE	68
72	
LEVEL 4	
ACCESSIBLE PARKING SPACE	2
STANDARD PARKING SPACE	50
52	
TOTAL PARKING SPACES: 491	

EV PARKING:

- 20% TO HAVE EV CHARGING CAPABLE = **100 SPACES *EV-C***
- 4% TO HAVE EV CHARGING INSTALLED = **20 SPACES *EV-I***

GRAPHIC LEGEND

- STANDARD PARKING SPACE
- ACCESSIBLE PARKING SPACE
- ACCESSIBLE PARKING SPACE - VAN
- VALET PARKING SPACE
- TANDEM PARKING SPACE
- LOADING SPACE (10' X 30')

1 PARKING PLAN - LEVEL P2
SCALE: 1" = 30'-0"

2 PARKING PLAN - LEVEL P1
SCALE: 1" = 30'-0"

NORTH

0 30' 60' 90'
GRAPHIC SCALE: 1" = 30' - 0"

SCOTTSDALE CITY CENTER

7201 EAST CAMELBACK ROAD
SCOTTSDALE, AZ 85251

SMITHGROUP

455 NORTH THIRD STREET
SUITE 250
PHOENIX, AZ 85004
602.265.2200
smithgroup.com

SUSTAINABILITY ENGINEERING GROUP
CIVIL ENGINEER
8280 E GELDING DRIVE, SUITE 101
SCOTTSDALE, AZ 85260
480.588.7226

SMITHGROUP
LANDSCAPE ARCHITECT
455 N THIRD STREET, SUITE 250
PHOENIX, AZ 85004
602.265.2200

ISSUED FOR	DATE
DEVELOPMENT REVIEW SUBMITTAL	*16MAY2025*
DEVELOPMENT REVIEW SUBMITTAL	*11NOV2024*
DEVELOPMENT REVIEW SUBMITTAL	*03JUL2023*

SEALS AND SIGNATURES

NOT FOR CONSTRUCTION

CONCEPTUAL PLANS FOR DR REVIEW ONLY

SHEET TITLE

PARKING PLANS

PROJECT NUMBER 14165.000

SHEET NUMBER DR **35.1**

Plot Date: 5/8/2025 1:19:47 PM Author

*** THIS SHEET IS INTENDED TO BE VIEWED AND PRINTED IN COLOR ***

TYPICAL SPACE DIMENSIONS

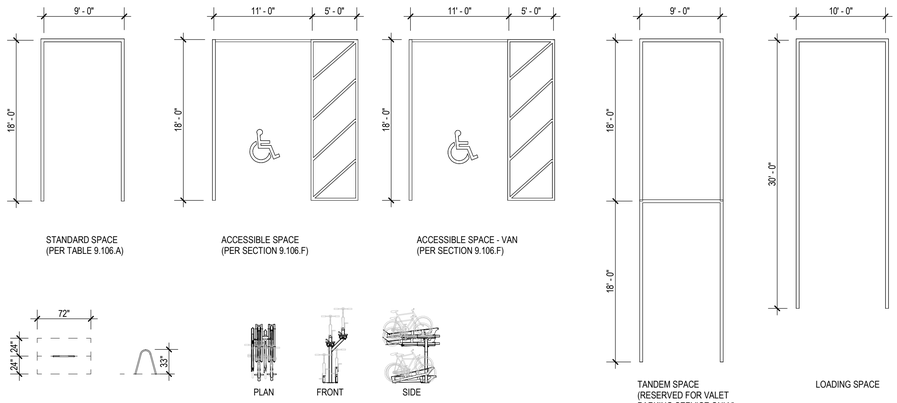

EV-CHARGING CAPABLE PARKING SPACE - INFRASTRUCTURE FOR FUTURE CHARGING STATION INSTALLATION

EV-CHARGING INSTALLED PARKING SPACE - CHARGING STATION PROVIDED

PARKING COUNT

SPACE TYPE	QUANTITY
LEVEL P2	
ACCESSIBLE PARKING SPACE	4
STANDARD PARKING SPACE	115
TANDEM PARKING SPACE	8
127	
LEVEL P1	
ACCESSIBLE PARKING SPACE	4
ACCESSIBLE PARKING SPACE - VAN	4
STANDARD PARKING SPACE	135
TANDEM PARKING SPACE	12
155	
LEVEL 1 (+1279.00')	
VALET PARKING SPACE	9
9	
LEVEL 2	
ACCESSIBLE PARKING SPACE	4
STANDARD PARKING SPACE	46
TANDEM PARKING SPACE	26
76	
LEVEL 3	
ACCESSIBLE PARKING SPACE	4
STANDARD PARKING SPACE	68
72	
LEVEL 4	
ACCESSIBLE PARKING SPACE	2
STANDARD PARKING SPACE	50
52	
TOTAL PARKING SPACES: 491	

EV PARKING:
- 20% TO HAVE EV CHARGING CAPABLE = **100 SPACES *EV-C***
- 4% TO HAVE EV CHARGING INSTALLED = **20 SPACES *EV-I***

GRAPHIC LEGEND

- STANDARD PARKING SPACE
- ACCESSIBLE PARKING SPACE
- ACCESSIBLE PARKING SPACE - VAN
- VALET PARKING SPACE
- TANDEM PARKING SPACE
- LOADING SPACE (10' X 30')

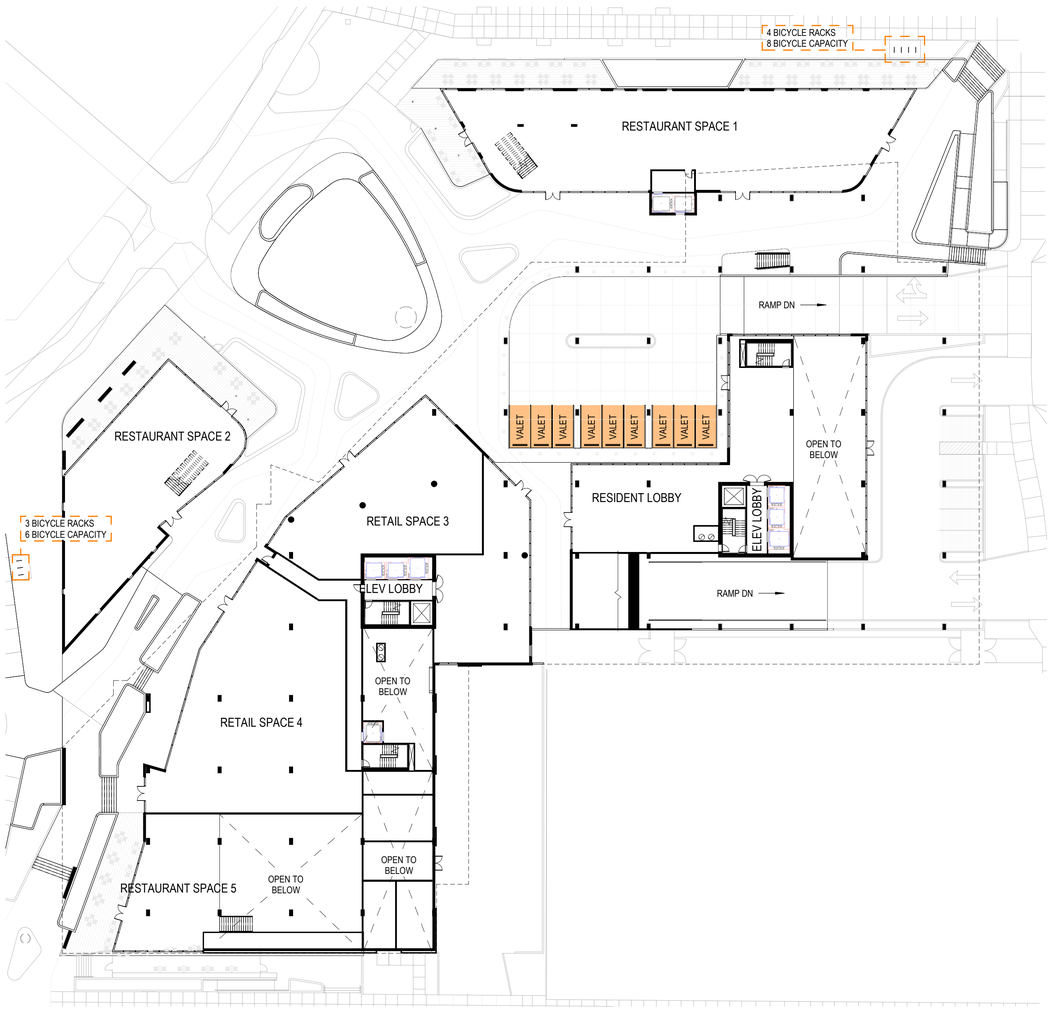

NORTH

1 PARKING PLAN - LEVEL 1
SCALE: 1" = 30'-0"

0 30' 60' 90'
GRAPHIC SCALE: 1" = 30' - 0"

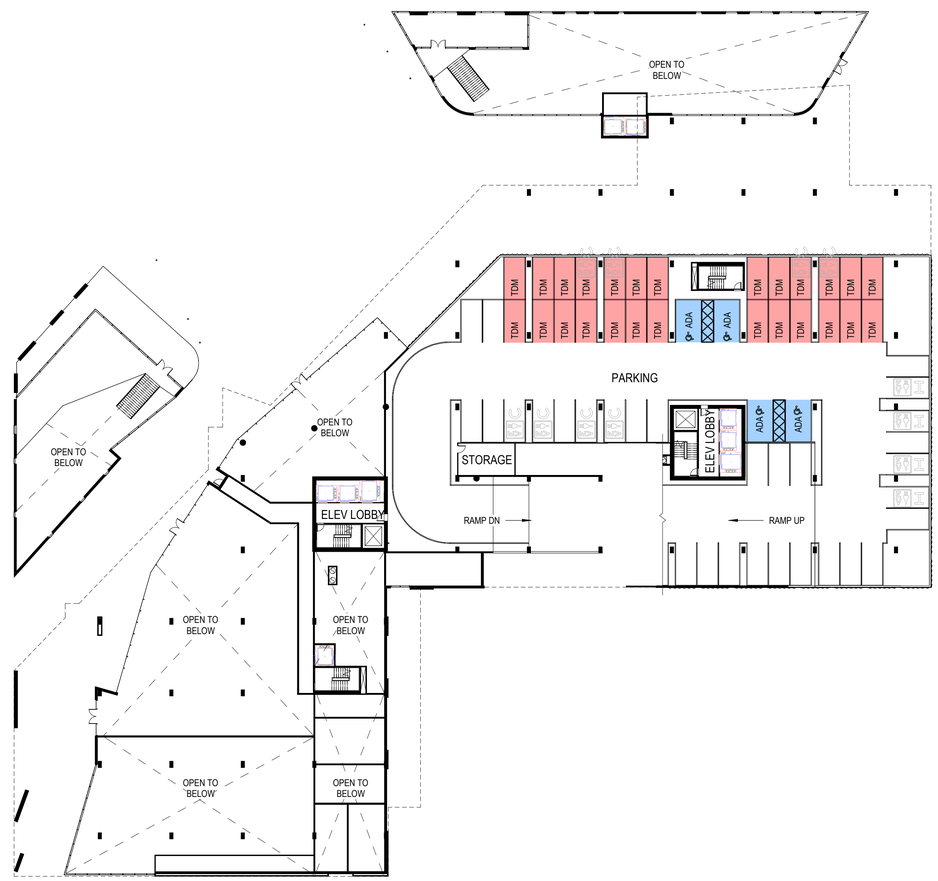

NORTH

2 PARKING PLAN - LEVEL 2
SCALE: 1" = 30'-0"

0 30' 60' 90'
GRAPHIC SCALE: 1" = 30' - 0"

SCOTTSDALE CITY CENTER

7201 EAST CAMELBACK ROAD
SCOTTSDALE, AZ 85251

SMITHGROUP

455 NORTH THIRD STREET
SUITE 250
PHOENIX, AZ 85004
602.265.2200
smithgroup.com

SUSTAINABILITY ENGINEERING GROUP
CIVIL ENGINEER
8280 E GELDING DRIVE, SUITE 101
SCOTTSDALE, AZ 85260
480.588.7226

SMITHGROUP
LANDSCAPE ARCHITECT
455 N THIRD STREET, SUITE 250
PHOENIX, AZ 85004
602.265.2200

ISSUED FOR	DATE
DEVELOPMENT REVIEW SUBMITTAL	*16MAY2025*
DEVELOPMENT REVIEW SUBMITTAL	*11NOV2024*
DEVELOPMENT REVIEW SUBMITTAL	*03JUL2023*

SEALS AND SIGNATURES

NOT FOR CONSTRUCTION

CONCEPTUAL PLANS FOR DR REVIEW ONLY

SHEET TITLE

PARKING PLANS

PROJECT NUMBER 14165.000

SHEET NUMBER DR 35.2

Author

5/8/2025 1:19:51 PM

Plot Date:

*** THIS SHEET IS INTENDED TO BE VIEWED AND PRINTED IN COLOR ***

TYPICAL SPACE DIMENSIONS

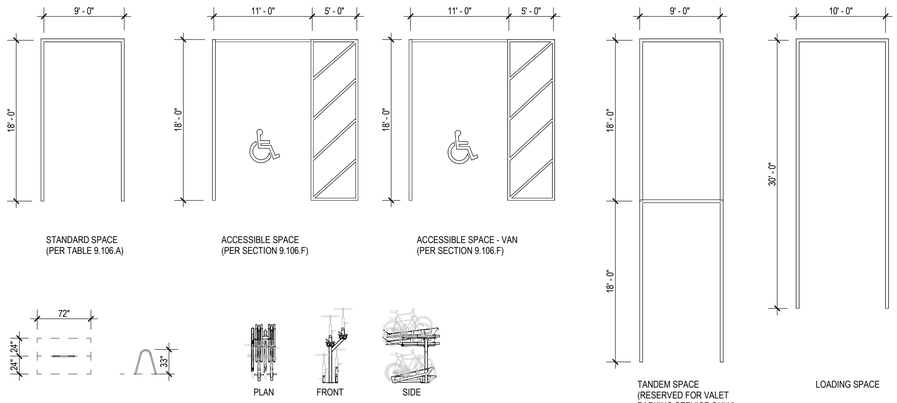

EV-CHARGING CAPABLE PARKING SPACE - INFRASTRUCTURE FOR FUTURE CHARGING STATION INSTALLATION

EV-CHARGING INSTALLED PARKING SPACE - CHARGING STATION PROVIDED

PARKING COUNT

SPACE TYPE	QUANTITY
LEVEL P2	
ACCESSIBLE PARKING SPACE	4
STANDARD PARKING SPACE	115
TANDEM PARKING SPACE	8
127	
LEVEL P1	
ACCESSIBLE PARKING SPACE	4
ACCESSIBLE PARKING SPACE - VAN	4
STANDARD PARKING SPACE	135
TANDEM PARKING SPACE	12
155	
LEVEL 1 (+1279.00')	
VALET PARKING SPACE	9
9	
LEVEL 2	
ACCESSIBLE PARKING SPACE	4
STANDARD PARKING SPACE	46
TANDEM PARKING SPACE	26
76	
LEVEL 3	
ACCESSIBLE PARKING SPACE	4
STANDARD PARKING SPACE	68
72	
LEVEL 4	
ACCESSIBLE PARKING SPACE	2
STANDARD PARKING SPACE	50
52	
TOTAL PARKING SPACES: 491	

EV PARKING:

- 20% TO HAVE EV CHARGING CAPABLE = **100 SPACES *EV-C***
- 4% TO HAVE EV CHARGING INSTALLED = **20 SPACES *EV-I***

GRAPHIC LEGEND

- **STANDARD PARKING SPACE**
- **ACCESSIBLE PARKING SPACE**
- **ACCESSIBLE PARKING SPACE - VAN**
- **VALET PARKING SPACE**
- **TANDEM PARKING SPACE**
- **LOADING SPACE (10' X 30')**

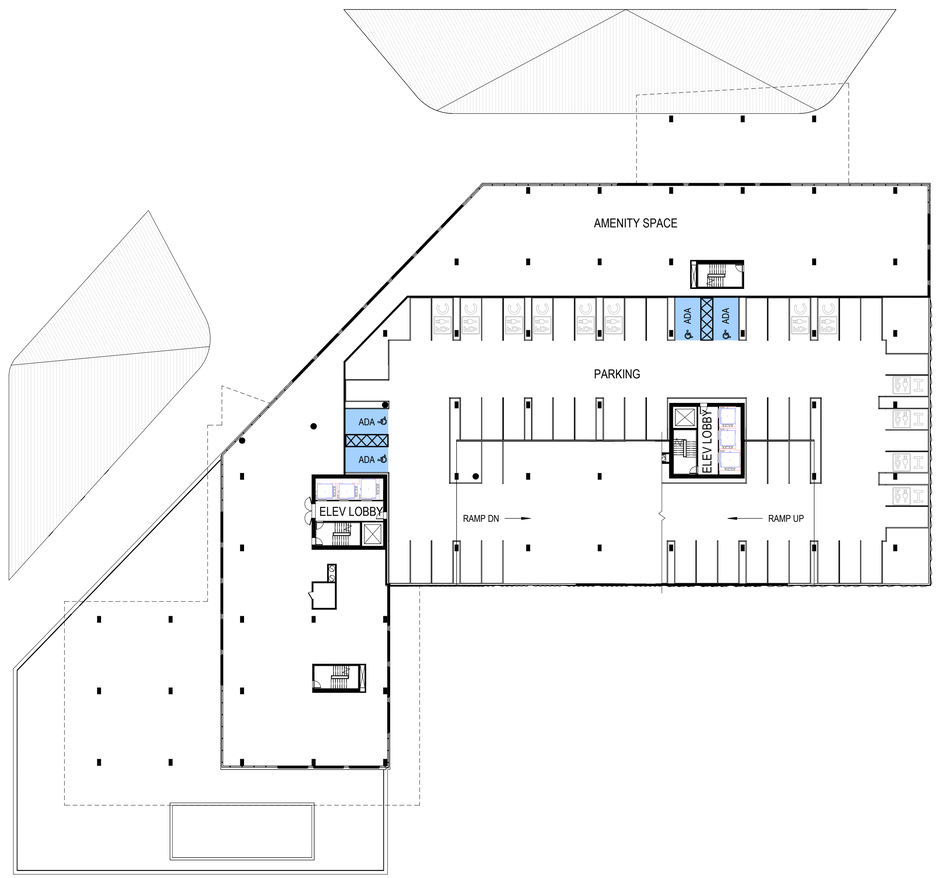

NORTH

1 PARKING PLAN - LEVEL 3
SCALE: 1" = 30'-0"

0 30' 60' 90'
GRAPHIC SCALE: 1" = 30' - 0"

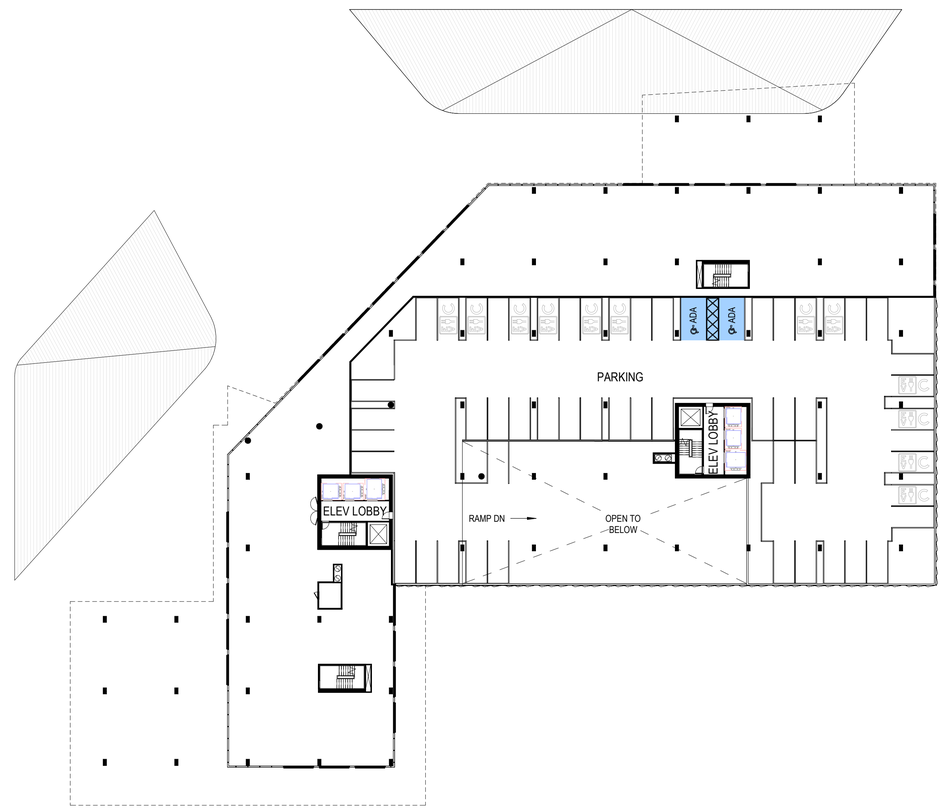

NORTH

2 PARKING PLAN - LEVEL 4
SCALE: 1" = 30'-0"

0 30' 60' 90'
GRAPHIC SCALE: 1" = 30' - 0"

SCOTTSDALE CITY CENTER

7201 EAST CAMELBACK ROAD
SCOTTSDALE, AZ 85251

SMITHGROUP

455 NORTH THIRD STREET
SUITE 250
PHOENIX, AZ 85004
602.265.2200
smithgroup.com

SUSTAINABILITY ENGINEERING GROUP
CIVIL ENGINEER
8280 E GELDING DRIVE, SUITE 101
SCOTTSDALE, AZ 85260
480.588.7226

SMITHGROUP
LANDSCAPE ARCHITECT
455 N THIRD STREET, SUITE 250
PHOENIX, AZ 85004
602.265.2200

ISSUED FOR	DATE
DEVELOPMENT REVIEW SUBMITTAL	*16MAY2025*
DEVELOPMENT REVIEW SUBMITTAL	*11NOV2024*
DEVELOPMENT REVIEW SUBMITTAL	*03JUL2023*

SEALS AND SIGNATURES

NOT FOR CONSTRUCTION

CONCEPTUAL PLANS FOR DR REVIEW ONLY

SHEET TITLE

PARKING PLANS

PROJECT NUMBER 14165.000

DR **35.3**

SHEET NUMBER

Author

5/8/2025 1:19:54 PM

Plot Date:

*** THIS SHEET IS INTENDED TO BE VIEWED AND PRINTED IN COLOR ***