Archaeological Resources

Airport Vicinity Development Checklist

Parking Study

Trip Generation Comparison

Parking Master Plan

CASCADE: PH60XC104

COAL CREEK CONSULTING

2166 E University Dr., Suite 201
Tempe AZ, 85281

May 31, 2019

ZAC NC Asset Investors, LLC
1855 Olympic Blvd., Suite 300
Walnut Creek, CA 94596

RE: Site Agreement between Zenith Arizona Inc.("Owner") and Sprint Spectrum L.P ("Sprint"), dated December 12, 2018 ("Site Agreement"), with respect to the real property located at 7330 N. Pima Rd., Scottsdale, AZ 85258, Cascade No. PH60XC104 ("Site")

Dear Sir or Madam:

This letter is to advise you that it will be necessary within the near future for Sprint to make certain physical modifications to equipment within Sprint's premises at the Site. These improvements are being undertaken in order to ensure the continued technical and economic feasibility of Sprint's facility, and are needed for Sprint to make optimal use of the Site for the purposes intended by the Site Agreement. As described below, these modifications should have no significant impact on Landlord's property or operations. However, in accordance with the Site Agreement, Sprint requests that Landlord acknowledge notice of, and consent to, the following modifications which are specifically described below and in the Construction Drawings dated 5/23/19 annexed hereto:

To the Flagpole, remove (6) 1 ¼" coax and replace with (18) ½" coax, remove (1) existing antenna canister and replace with (1) new antenna canister.

Please indicate the Landlord's acknowledgement, consent and approval for Sprint to proceed with the modifications outlined above by signing below and returning one copy of this letter to me via fax to the attention of Jacob Rynes at (480)204-8226 or scan and email the Consent Letter to jrynes@coal-creek.com. Alternatively, the letter can be returned by regular mail to Jacob Rynes at Coal Creek Consulting, 2166 E. University Dr., Suite 201, Tempe, AZ 85281.

Thank you in advance for your prompt attention to this matter.

Regards,

By: <u>Jacob Rynes, an authorized representative of Sprint</u>

ACKNOWLEDGED AND AGREED TO:

ZAC NC Asset Investors, LLC

_____

Printed Name: Mark Scheberies

Title: President

Date: 6-4, 2019

Landlord Contact Email address: marks@hallequitiesgroup.com

Landlord Contact Name and Number for Access and/or work scheduling:

Access Contact Name: _____

Access Contact Number: _____

30-UP-1999#2
6/27/2019

B2 PROJECT
PH60XC104
DAYS INN AND SUITES

7330 N. PIMA RD.
SCOTTSDALE, ARIZONA 85258
LATITUDE: 33.544861
LONGITUDE: -111.891806
PHOENIX MARKET

SHEET INDEX

SHEET	DESCRIPTION
T-1	TITLE SHEET, VICINITY MAP AND GENERAL INFORMATION
LS-1	SURVEY DETAIL
LS-2	SURVEY DETAIL
SP-1	SPRINT SPECIFICATIONS
SP-2	SPRINT SPECIFICATIONS
CIVIL	
C-1	OVERALL SITE PLAN
C-2	SITE PLAN
C-3	EXISTING/NEW EQUIPMENT AND ANTENNA PLAN
C-4	EXISTING/FINAL ELEVATION
C-5	EQUIPMENT DETAILS
C-6	EQUIPMENT DETAILS
ELECTRICAL PLANS	
E-1	ONE-LINE, PANEL SCHEDULES AND GROUNDING PLAN

CODE BLOCK

CODE COMPLIANCE:
ALL WORK AND MATERIALS SHALL BE PERFORMED AND INSTALLED IN ACCORDANCE WITH THE CURRENT EDITIONS OF THE FOLLOWING CODES ADOPTED BY THE LOCAL GOVERNING AUTHORITIES. NOTHING IN THESE PLANS IS TO BE CONSTRUCTED TO PERMIT WORK NOT CONFORMING TO THESE CODES.

2015 INTERNATIONAL BUILDING CODE
2015 INTERNATIONAL MECHANICAL CODE
2014 NATIONAL ELECTRICAL CODE

ACCESSIBILITY REQUIREMENTS:
THIS FACILITY IS UNMANNED AND NOT FOR HUMAN HABITATION. HANDICAPPED ACCESS REQUIREMENTS ARE NOT REQUIRED IN ACCORDANCE WITH THE CURRENT INTERNATIONAL BUILDING CODE.

VICINITY MAP

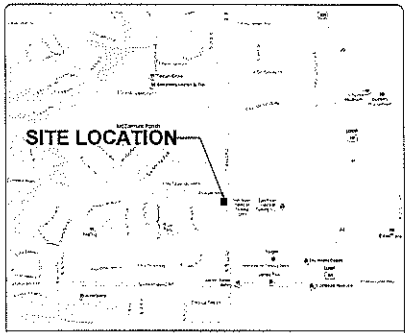

PROJECT DESCRIPTION

SPRINT PROPOSES TO:
REMOVE EXISTING 100 AMP BREAKER
REMOVE (2) EXISTING EQUIPMENT CABINETS
REMOVE (6) 1-1/4"ø UNDERGROUND COAX
REMOVE EXISTING ANTENNA CANISTER
REMOVE EXISTING DIPLEXERS
CUT EXISTING POLE TO MAINTAIN OVERALL HEIGHT
ADD A 80 AMP BREAKER
ADD (2) NEW EQUIPMENT CABINETS
ADD (3) NEW RRH'S BELOW EXISTING RRH'S IN COMPOUND
ADD (3) NEW RRH'S TO NEW UNISTRUT INSIDE COMPOUND
ADD (3) DIPLEXERS INSIDE COMPOUND
ADD (18) 1/2"ø COAX UNDERGROUND AND UP INSIDE FLAGPOLE
ADD A NEW ANTENNA CANISTER
ADD A ANTENNA SHROUD AROUND ANTENNA CANISTER

PROJECT TEAM

CLIENT:
SPRINT
11811 N. TATUM BLVD., STE P133
PHOENIX, ARIZONA 85028
CONTACT: LISA HOLLY
PHONE: (623) 204-0005

SITE ACQ. CONSULTANT:
COAL CREEK CONSULTING
2166 E. UNIVERSITY DR., STE 201
TEMPE, ARIZONA 85281
CONTACT: STEVE CIOLEK
PHONE: (480) 246-4131

DESIGN FIRM:
COAL CREEK CONSULTING
2166 E. UNIVERSITY DR., STE 201
TEMPE, ARIZONA 85281
CONTACT: SHAWN EVANS
PHONE: (602) 756-5829

CIVIL ENGINEER:
TERRA DYNAMIC ENGINEERING, LLC
P.O. BOX 221131
PHOENIX, ARIZONA 85028
CONTACT: ROBERT ORLANDO
PHONE: (602) 482-1603
EMAIL: ROBERT@TERRADYNAMIC.US

811 KNOW WHAT'S BELOW CALL BEFORE YOU DIG

SIGNATURE BLOCK

APPROVAL	SIGNATURE	DATE
SITE ACQUISITION & ZONING		
CONSTRUCTION MANAGER		
A&E MANAGER		
PLANNING CONSULTANT		
RF MANAGER		
PROPERTY OWNER		
SPRINT REPRESENTATIVE		

DRIVING DIRECTIONS

FROM THE SPRINT OFFICE IN PHOENIX, AZ

TAKE TATUM BLVD. N. TO CACTUS RD. AND TAKE A RIGHT TO THE AZ LOOP 101 S. AND EXIT ON PIMA RD. AND TAKE A RIGHT AND THE SITE WILL BE ON THE RIGHT SIDE OF THE ROAD JUST BEFORE TALKING STICK WAY

PROJECT SUMMARY

APPLICANT:
COAL CREEK CONSULTING
2166 E. UNIVERSITY DR., STE 201
TEMPE, ARIZONA 85281
CONTACT: STEVE CIOLEK
PHONE: (480) 246-4131

PROPERTY OWNER:
ZAC NC ASSET INVESTORS, LLC
1655 OLYMPIC BLVD. SUITE 300
WALNUT CREEK CA 94596
CONTACT: GARRETT BORGES
PHONE: (925) 933-400

APN: 174-08-939
ZONING CLASSIFICATION: R-5 PCD
JURISDICTION: CITY OF SCOTTSDALE
EXISTING/NEW: WIRELESS TELECOMMUNICATIONS FACILITY

NOTE:
PRIOR TO ANY CONSTRUCTION, SCHEDULE A PRE-CONSTRUCTION MEETING WITH INSPECTION SERVICES BY CALLING (480) 312-5750

PLANS PREPARED FOR
Sprint
Together with Nextel.

CONSULTANT
COAL CREEK CONSULTING
2166 E. UNIVERSITY DR., STE 201
TEMPE, ARIZONA 85281
PHONE: (602) 429-0933 FAX: (480) 536-2632

ENGINEER OF RECORD
TERRA DYNAMIC ENGINEERING, LLC
P.O. BOX 221131, PHOENIX, AZ 85028
PHONE: (602) 482-1603
EMAIL: ROBERT@TERRADYNAMIC.US

ROBERTO ORLANDO

NO.	DATE	DESCRIPTION	BY
1	05/08/19	REVIEW	SPE
2	05/14/19	REVISION 1	SPE
3	05/21/19	REVISION 2	SPE
4	05/23/19	SUBMITTAL	SPE

PROJECT INFORMATION
JOB: 01-235-04

PH60XC104
DAYS INN
AND SUITES

7330 N. PIMA RD.
SCOTTSDALE, ARIZONA 85258

SHEET TITLE
TITLE SHEET, VICINITY MAP & GENERAL INFO.

SHEET NUMBER
T-1

THESE OUTLINES SPECS IN CONJUNCTION WITH THE SPRINT STANDARD CONSTRUCTION SPECS, INCLUDING CONTRACT DOCUMENTS AND THE CONSTRUCTION DRAWINGS DESCRIBE THE WORK TO BE PERFORMED BY THE CONTRACTOR.

SECTION 01 100 – SCOPE OF WORK

THE WORK:
SHALL COMPLY WITH APPLICABLE NATIONAL CODES AND STANDARDS, LATEST EDITION, AND PORTIONS THEREOF.

PRECEDENCE:
SHOULD CONFLICTS OCCUR BETWEEN THE STANDARD CONSTRUCTION SPECIFICATIONS FOR WIRELESS SITES INCLUDING THE STANDARD CONSTRUCTION DETAILS FOR WIRELESS SITES AND THE CONSTRUCTION DRAWINGS, INFORMATION ON THE CONSTRUCTION DRAWINGS SHALL TAKE PRECEDENCE.

SITE FAMILIARITY:
CONTRACTOR SHALL BE RESPONSIBLE FOR FAMILIARIZING HIMSELF WITH ALL CONTRACT DOCUMENTS, FIELD CONDITIONS AND DIMENSIONS PRIOR TO PROCEEDING WITH CONSTRUCTION.

ON-SITE SUPERVISION:
THE CONTRACTOR SHALL SUPERVISE AND DIRECT THE WORK AND SHALL BE RESPONSIBLE FOR CONSTRUCTION MEANS, METHODS, TECHNIQUES, SEQUENCES, AND PROCEDURES IN ACCORDANCE WITH THE CONTRACT DOCUMENTS.

DRAWINGS, SPECIFICATIONS AND DETAILS REQUIRED AT JOBSITE:
THE CONSTRUCTION CONTRACTOR SHALL MAINTAIN A FULL SET OF THE CONSTRUCTION DRAWINGS AT THE JOBSITE FROM MOBILIZATION THROUGH CONSTRUCTION COMPLETION.

A. DETAILS ARE INTENDED TO SHOW DESIGN INTENT. PROVIDE ALL MATERIALS AND LABOR AS REQUIRED TO PROVIDE A COMPLETE AND FUNCTIONING SYSTEM. MODIFICATIONS MAY BE REQUIRED TO SUIT JOB DIMENSIONS OR CONDITIONS, AND SUCH MODIFICATIONS SHALL BE INCLUDED AS PART OF THE WORK.

B. CONTRACTOR SHALL NOTIFY SPRINT CONSTRUCTION MANAGER OF ANY VARIATIONS PRIOR TO PROCEEDING WITH THE WORK.DIMENSIONS SHOWN ARE TO FINISH SURFACES UNLESS NOTED OTHERWISE. MODIFICATIONS MAY BE REQUIRED TO SUIT JOB DIMENSIONS OR CONDITIONS, AND SUCH MODIFICATIONS SHALL BE INCLUDED AS PART OF THE WORK.

C. MARK THE FIELD SET OF DRAWINGS IN RED, DOCUMENTING ANY CHANGES FROM THE CONSTRUCTION DOCUMENTS.

METHODS OF PROCEDURE (MOPS) FOR CONSTRUCTION:
CONTRACTOR SHALL PERFORM WORK AS DESCRIBED IN

A. COAX COLOR CODING SWEEPS AND FIBER TESTING TS-0200 AND EL-0568

B. CABLE LABELING EN-2012-00

C. APPLICABLE INSTALLATION MOPS IDENTIFIED ELSEWHERE IN THE CONTRACT DOCUMENTS

SECTION 01 200 – COMPANY FURNISHED MATERIAL AND EQUIPMENT

COMPANY FURNISHED MATERIAL AND EQUIPMENT IS IDENTIFIED ON THE RF DATA SHEET IN THE CONSTRUCTION DRAWINGS.

CONTRACTOR IS RESPONSIBLE FOR SPRINT PROVIDED MATERIAL AND EQUIPMENT TO ENSURE IT IS PROTECTED AND HANDLED PROPERLY THROUGHOUT THE CONSTRUCTION DURATION.

CONTRACTOR RESPONSIBLE FOR RECEIPT OF SPRINT FURNISHED EQUIPMENT AT CELL SITE OR CONTRACTORS LOCATION. CONTRACTOR TO COMPLETE SHIPPING AND RECEIPT DOCUMENTATION IN ACCORDANCE WITH COMPANY PRACTICE.

SECTION 01 300 – CELL SITE CONSTRUCTION

NOTICE TO PROCEED:
NO WORK SHALL COMMENCE PRIOR TO COMPANY'S WRITTEN NOTICE TO PROCEED AND THE ISSUANCE OF WORK ORDER.

SITE CLEANLINESS:
CONTRACTOR SHALL KEEP THE SITE FREE FROM ACCUMULATING WASTE MATERIAL, DEBRIS, AND TRASH. AT THE COMPLETION OF THE WORK, CONTRACTOR SHALL REMOVE FROM THE SITE ALL REMAINING RUBBISH, IMPLEMENTS, TEMPORARY FACILITIES, AND SURPLUS MATERIALS.

SECTION 01 400 – SUBMITTALS & TESTS

ALTERNATES:
AT THE COMPANY'S REQUEST, ANY ALTERNATIVES TO THE MATERIALS OR METHODS SPECIFIED SHALL BE SUBMITTED TO SPRINTS CONSTRUCTION MANAGER FOR APPROVAL. SPRINT WILL REVIEW AND APPROVE ONLY THOSE REQUESTS MADE IN WRITING. NO VERBAL APPROVALS WILL BE CONSIDERED.

TESTS AND INSPECTIONS:

A. THE CONTRACTOR SHALL BE RESPONSIBLE FOR ALL CONSTRUCTION TESTS, INSPECTIONS AND PROJECT DOCUMENTATION.

B. CONTRACTOR SHALL ACCOMPLISH TESTING INCLUDING BUT NOT LIMITED TO THE FOLLOWING:

1. COAX SWEEPS AND FIBER TESTS PER TS-0200 REV 4 ANTENNA LINE ACCEPTANCE STANDARDS.

2. AGL, AZIMUTH AND DOWNTILT PROVIDE AN AUTOMATED REPORT UPLOADED TO SITERRA USING A COMMERCIAL MADE-FOR THE PURPOSE ELECTRONIC ANTENNA ALIGNMENT TOOL (AAT). INSTALLED AZIMUTH, CENTERLINE AND DOWNTILT MUST CONFORM WITH RF CONFIGURATION DATA

3. CONTRACTOR SHALL BE RESPONSIBLE FOR ANY AND ALL CORRECTIONS TO ANY WORK IDENTIFIED AS UNACCEPTABLE IN SITE INSPECTION ACTIVITIES AND/OR AS A RESULT OF TESTING.

4. ALL TESTING REQUIRED BY APPLICABLE INSTALLATION MOPS.

C. REQUIRED CLOSEOUT DOCUMENTATION INCLUDES, BUT IS NOT LIMITED TO THE FOLLOWING:

1. AZIMUTH, DOWNTILT, AGL FROM SUNSIGHT INSTRUMENTS – ANTENNALIGN ALIGNMENT TOOL (AAT)

2. SWEEP AND FIBER TESTS

3. SCALABLE BARCODE PHOTOGRAPHS OF TOWER TOP AND INACCESSIBLE SERIALIZED EQUIPMENT

4. ALL AVAILABLE JURISDICTIONAL PERMIT AND OCCUPANCY INFORMATION

5. PDF SCAN OF REDLINES PRODUCED IN FIELD

6. A PDF SCAN OF REDLINE MARK-UPS SUITABLE FOR USE IN ELECTRONIC AS-BUILT DRAWING PRODUCTION

7. LIEN WAIVERS

8. FINAL PAYMENT APPLICATION

9. REQUIRED FINAL CONSTRUCTION PHOTOS

10. CONSTRUCTION AND COMMISSIONING CHECKLIST COMPLETE WITH NO DEFICIENT ITEMS

11. APPLICABLE POST NTP TASKS INCLUDING DOCUMENT UPLOADS COMPLETED IN SITERRA (SPRINTS DOCUMENT REPOSITORY OF RECORD).

12. CLOSEOUT PHOTOGRAPHS AND CLOSEOUT CHECKLIST: SPRINT WILL PROVIDE SEPARATE GUIDANCE

SECTION 11 700 – ANTENNA ASSEMBLY, REMOTE RADIO UNITS AND CABLE INSTALLATION

SUMMARY:
THIS SECTION SPECIFIES INSTALLATION OF ANTENNAS, RRH'S, AND CABLE EQUIPMENT, INSTALLATION, AND TESTING OF COAXIAL FIBER CABLE.

ANTENNAS AND RRH'S:
THE NUMBER AND TYPE OF ANTENNAS AND RRH'S TO BE INSTALLED IS DETAILED ON THE CONSTRUCTION DRAWINGS.

HYBRID CABLE:
HYBRID CABLE WILL BE DC/FIBER AND FURNISHED FOR INSTALLATION AT EACH SITE. CABLE SHALL BE INSTALLED PER THE CONSTRUCTION DRAWINGS AND THE APPLICABLE MANUFACTURER'S REQUIREMENTS.

JUMPERS AND CONNECTORS:
FURNISH AND INSTALL 1/2" COAX JUMPER CABLES BETWEEN THE RRH'S AND ANTENNAS. JUMPERS SHALL BE TYPE LDF 4, FLC 12-50, CR 540, OR FXL 540, SUPER-FLEX CABLES ARE NOT ACCEPTABLE. JUMPERS BETWEEN THE RRH'S AND ANTENNAS OR TOWER TOP AMPLIFIERS SHALL CONSIST OF 1/2 INCH FOAM DIELECTRIC, OUTDOOR RATED COAXIAL CABLE, MIN LENGTH FOR JUMPER SHALL BE 10"-0".

REMOTE ELECTRICAL TILT (RET) CABLES:

MISCELLANEOUS:
INSTALL SPLITTERS, COMBINERS, FILTERS PER RF DATA SHEET, FURNISHED BY SPRINT.

ANTENNA INSTALLATION:
THE CONTRACTOR SHALL ASSEMBLE ALL ANTENNAS ONSITE IN ACCORDANCE WITH THE INSTRUCTIONS SUPPLIED BY THE MANUFACTURER. ANTENNA HEIGHT, AZIMUTH, AND FEED ORIENTATION INFORMATION SHALL BE A DESIGNATED ON THE CONSTRUCTION DRAWINGS.

A. THE CONTRACTOR SHALL POSITION THE ANTENNA ON TOWER PIPE MOUNTS SO THAT THE BOTTOM STRUT IS LEVEL. THE PIPE MOUNTS SHALL BE PLUMB TO WITHIN 1 DEGREE.

B. ANTENNA MOUNTING REQUIREMENTS: PROVIDE ANTENNA MOUNTING HARDWARE AS INDICATED ON THE DRAWINGS.

HYBRID CABLE INSTALLATION:

A. THE CONTRACTOR SHALL ROUTE, TEST, AND INSTALL ALL CABLES AS INDICATED ON THE CONSTRUCTION DRAWINGS AND IN ACCORDANCE WITH THE MANUFACTURER'S RECOMMENDATIONS.

B. THE INSTALLED RADIUS OF THE CABLES SHALL NOT BE LESS THAN THE MANUFACTURER'S SPECIFICATIONS FOR BENDING RADII.

C. EXTREME CARE SHALL BE TAKEN TO AVOID DAMAGE TO THE CABLES DURING HANDLING AND INSTALLATION.

1. FASTENING MAIN HYBRID CABLES: ALL CABLES SHALL BE INSTALLED INSIDE MONOPOLE WITH CABLE SUPPORT GRIPS AS REQUIRED BY THE MANUFACTURER.

2. FASTENING INDIVIDUAL FIBER AND DC CABLES ABOVE BREAKOUT ENCLOSURE (MEDUSA), WITHIN THE MMBS CABINET AND ANY INTERMEDIATE DISTRIBUTION BOXES:

a. FIBER: SUPPORT FIBER BUNDLES USING ½" VELCRO STRAPS OF THE REQUIRED LENGTH @ 18" OC. STRAPS SHALL BE UV, OIL AND WATER RESISTANT AND SUITABLE FOR INDUSTRIAL INSTALLATIONS AS MANUFACTURED BY TEXTOL OR APPROVED EQUAL.

b. DC: SUPPORT DC BUNDLES WITH ZIP TIES OF THE ADEQUATE LENGTH. ZIP TIES TO BE UV STABILIZED, BLACK NYLON, WITH TENSILE STRENGTH AT 12,000 PSI AS MANUFACTURED BY NELCO PRODUCTS OR EQUAL.

3. FASTENING JUMPERS: SECURE JUMPERS TO THE SIDE ARMS OR HEAD FRAMES USING STAINLESS STEEL TIE WRAPS OR STAINLESS STEEL BUTTERFLY CLIPS.

4. CABLE INSTALLATION:

a. INSPECT CABLE PRIOR TO USE FOR SHIPPING DAMAGE. NOTIFY THE CONSTRUCTION MANAGER.

b. CABLE ROUTING: CABLE INSTALLATION SHALL BE PLANNED TO ENSURE THAT THE LINES WILL BE PROPERLY ROUTED IN THE CABLE ENVELOP AS INDICATED ON THE DRAWINGS. AVOID TWISTING AND CROSSOVERS.

c. HOIST CABLE USING PROPER HOISTING GRIPS. DO NOT EXCEED MANUFACTURES RECOMMENDED MAXIMUM BEND RADIUS.

5. GROUNDING OF TRANSMISSION LINES: ALL TRANSMISSION LINES SHALL BE GROUNDED AS INDICATED ON DRAWINGS.

6. HYBRID CABLE COLOR CODING: ALL COLOR CODING SHALL BE AS REQUIRED IN TS 0200 REV 4.

7. HYBRID CABLE LABELING: INDIVIDUAL HYBRID AND DC BUNDLES SHALL BE LABELED ALPHA-NUMERICALLY ACCORDING TO SPRINT CELL SITE ENGINEERING NOTICE – EN 2012-001, REV 1

WEATHERPROOFING EXTERIOR CONNECTORS AND HYBRID CABLE GROUND KITS:

A. ALL FIBER & COAX CONNECTORS AND GROUND KITS SHALL BE WEATHERPROOFED.

B. WEATHERPROOFED USING ONE OF THE FOLLOWING METHODS. ALL INSTALLATIONS MUST BE DONE IN ACCORDANCE WITH THE MANUFACTURER'S RECOMMENDATIONS AND INDUSTRY BEST PRACTICES.

1. COLD SHRINK: ENCOMPASS CONNECTOR IN COLD SHRINK TUBING AND PROVIDE A DOUBLE WRAP OF 2" ELECTRICAL TAPE EXTENDING 2" BEYOND TUBING. PROVIDE 3M COLD SHRINK CXS SERIES OR EQUAL.

2. SELF-AMALGAMATING TAPE: CLEAN SURFACES. APPLY A DOUBLE WRAP OF SELF-AMALGAMATING TAPE 2" BEYOND CONNECTOR. APPLY A SECOND WRAP OF SELF-AMALGAMATING TAPE IN OPPOSITE DIRECTION. APPLY DOUBLE WRAP OF 2" WIDE ELECTRICAL TAPE EXTENDING 2" BEYOND THE SELF-AMALGAMATING TAPE.

3. 3M SUM LOCK CLOSURE 716: SUBSTITUTIONS WILL NOT BE ALLOWED.

4. OPEN FLAME ON JOB SITE IS NOT ACCEPTABLE

SECTION 11 800 – INSTALLATION OF MULTIMODAL BASE STATIONS (MMBS) AND RELATED EQUIPMENT

A. THIS SECTION SPECIFIES MMBS CABINETS, POWER CABINETS, AND INTERNAL EQUIPMENT INCLUDING BY NOT LIMITED TO RECTIFIERS, POWER DISTRIBUTION UNITS, BASE BAND UNITS, SURGE ARRESTORS, BATTERIES, AND SIMILAR EQUIPMENT FURNISHED BY THE COMPANY FOR INSTALLATION BY THE CONTRACTOR (OFCI).

B. CONTRACTOR SHALL PROVIDE AND INSTALL ALL MISCELLANEOUS MATERIALS AND PROVIDE ALL LABOR REQUIRED FOR INSTALLATION EQUIPMENT IN EXISTING CABINET OR NEW CABINET AS SHOWN ON DRAWINGS AND AS REQUIRE BY THE APPLICABLE INSTALLATION MOPS.

C. COMPLY WITH MANUFACTURERS INSTALLATION AND START-UP REQUIREMENTS

PLANS PREPARED FOR

Sprint
Together with Nextel.

CONSULTANT

COAL CREEK CONSULTING
2166 E. UNIVERSITY DR., STE 201
TEMPE, ARIZONA 85281
PHONE: (602) 422-0535 FAX: (480) 638-2852

ENGINEER OF RECORD

TERRA DYNAMIC ENGINEERING, LLC
P.O. BOX 22131, PHOENIX, AZ 85028
PHONE: (602) 482-1603
EMAIL: ROBERTO@TERRADYNAMIC.US

NO.	DATE	DESCRIPTION	BY
1	05/08/19	REVIEW	SPE
2	05/14/19	REVISION 1	SPE
3	05/21/19	REVISION 2	SPE
4	05/23/19	SUBMITTAL	SPE

PROJECT INFORMATION
JOB: 01-203-04

PH60XC104
DAYS INN
AND SUITES

7330 N. PIMA RD.
SCOTTSDALE, ARIZONA 85258

SHEET TITLE

SPRINT
SPECIFICATIONS

SHEET NUMBER

SP-1

30-UP-1999#2
6/27/2019

30-UP-1999#2
6/27/2019

SECTION 26 100 – BASIC ELECTRICAL REQUIREMENTS

SUMMARY:
THIS SECTION SPECIFIES BASIC ELECTRICAL REQUIREMENTS FOR SYSTEMS AND COMPONENTS.

QUALITY ASSURANCE:

A. ALL EQUIPMENT FURNISHED UNDER DIVISION 26 SHALL CARRY UL LABELS AND LISTINGS WHERE SUCH LABELS AND LISTINGS ARE AVAILABLE IN THE INDUSTRY.

B. MANUFACTURERS OF EQUIPMENT SHALL HAVE A MINIMUM OF THREE YEARS EXPERIENCE WITH THEIR EQUIPMENT INSTALLED AND OPERATING IN THE FIELD IN A USE SIMILAR TO THE NEW USE FOR THIS PROJECT.

C. MATERIALS AND EQUIPMENT: ALL MATERIALS AND EQUIPMENT SPECIFIED IN DIVISION 26 OF THE SAME TYPE SHALL BE OF THE SAME MANUFACTURER AND SHALL BE NEW, OF THE BEST QUALITY AND DESIGN, AND FREE FROM DEFECTS

SUPPORTING DEVICES:

A. ALL EQUIPMENT FURNISHED UNDER DIVISION 26 SHALL CARRY UL LABELS AND LISTINGS WHERE SUCH LABELS AND LISTINGS ARE AVAILABLE IN THE INDUSTRY.

B. MANUFACTURERS OF EQUIPMENT SHALL HAVE A MINIMUM OF THREE YEARS EXPERIENCE WITH THEIR EQUIPMENT INSTALLED AND OPERATING IN THE FIELD IN A USE SIMILAR TO THE NEW USE FOR THIS PROJECT.

C. MATERIALS AND EQUIPMENT:
ALL MATERIALS AND EQUIPMENT SPECIFIED IN DIVISION 26 OF THE SAME TYPE SHALL BE OF THE SAME MANUFACTURER AND SHALL BE NEW, OF THE BEST QUALITY AND DESIGN, AND FREE FROM DEFECTS

SUPPORTING DEVICES:

A. MANUFACTURED STRUCTURAL SUPPORT MATERIALS: SUBJECT TO COMPLIANCE WITH REQUIREMENTS, PROVIDE PRODUCTS BY THE FOLLOWING:

1. ALLIED TUBE AND CONDUIT
2. B-LINE SYSTEM
3. UNISTRUT DIVERSIFIED PRODUCTS
4. THOMAS & BETTS

B. FASTENERS: TYPES, MATERIALS, AND CONSTRUCTION FEATURES AS FOLLOWS:

1. EXPANSION ANCHORS: CARBON STEEL WEDGE OR SLEEVE TYPE.
2. POWER-DRIVEN THREADED STUDS: HEAT-TREATED STEEL, DESIGNED SPECIFICALLY FOR THE INTENDED SERVICE.
3. FASTEN BY MEANS OF WOOD SCREWS ON WOOD.
4. TOGGLE BOLTS ON HOLLOW MASONRY UNITS.
5. CONCRETE INSERTS OR EXPANSION BOLTS ON CONCRETE OR SOLID MASONRY.
6. MACHINE SCREWS, WELDED THREADED STUDS, OR SPRING-TENSION CLAMPS ON STEEL.
7. EXPLOSIVE DEVICES FOR ATTACHING HANGERS TO STRUCTURE SHALL NOT BE PERMITTED.
8. DO NOT WELD CONDUIT, PIPE STRAPS, OR ITEMS OTHER THAN THREADED STUDS TO STEEL STRUCTURES.
9. IN PARTITIONS OF LIGHT STEEL CONSTRUCTION, USE SHEET METAL SCREWS.

SUPPORTING DEVICES:

A. INSTALL SUPPORTING DEVICES TO FASTEN ELECTRICAL COMPONENTS SECURELY AND PERMANENTLY IN ACCORDANCE WITH NEC.

B. COORDINATE WITH THE BUILDING STRUCTURAL SYSTEM AND WITH OTHER TRADES.

C. UNLESS OTHERWISE INDICATED ON THE DRAWINGS, FASTEN ELECTRICAL ITEMS AND THEIR SUPPORTING HARDWARE SECURELY TO THE STRUCTURE IN ACCORDANCE WITH THE FOLLOWING:

D. ENSURE THAT THE LOAD APPLIED BY ANY FASTENER DOES NOT EXCEED 25 PERCENT OF THE PROOF TEST LOAD.

E. USE VIBRATION AND SHOCK-RESISTANT FASTENERS FOR ATTACHMENTS TO CONCRETE SLABS.

ELECTRICAL IDENTIFICATION:

A. UPDATE AND PROVIDE TYPED CIRCUIT BREAKER SCHEDULES IN THE MOUNTING BRACKET, INSIDE DOORS OF AC PANEL BOARDS WITH ANY CHANGES MADE TO THE AC SYSTEM.

B. BRANCH CIRCUITS FEEDING AVIATION OBSTRUCTION LIGHTING EQUIPMENT SHALL BE CLEARLY IDENTIFIED AS SUCH AT THE BRANCH CIRCUIT PANELBOARD.

SECTION 26 200 – ELECTRICAL MATERIALS AND EQUIPMENT

CONDUIT:

A. RIGID GALVANIZED STEEL (RGS) CONDUIT SHALL BE USED FOR EXTERIOR LOCATIONS ABOVE GROUND AND IN UNFINISHED INTERIOR LOCATIONS AND FOR ENCASED RUNS IN CONCRETE. RIGID CONDUIT AND FITTINGS SHALL BE STEEL, COATED WITH ZINC EXTERIOR AND INTERIOR BY THE HOT DIP GALVANIZING PROCESS. CONDUIT SHALL BE PRODUCED TO ANSI SPECIFICATIONS C80.1, FEDERAL SPECIFICATION WW-C-581 AND SHALL BE LISTED WITH THE UNDERWRITERS' LABORATORIES. FITTINGS SHALL BE THREADED – SET SCREW OR COMPRESSION FITTINGS WILL NOT BE ACCEPTABLE. RGS CONDUITS SHALL BE MANUFACTURED BY ALLIED, REPUBLIC OR WHEATLAND.

B. UNDERGROUND CONDUIT IN CONCRETE SHALL BE POLYVINYLCHLORIDE (PVC) SUITABLE FOR DIRECT BURIAL AS APPLICABLE. JOINTS SHALL BE BELLED, AND FLUSH SOLVENT WELDED IN ACCORDANCE WITH MANUFACTURER'S INSTRUCTIONS. CONDUIT SHALL BE CARLON ELECTRICAL PRODUCTS OR APPROVED EQUAL.

C. TRANSITIONS BETWEEN PVC AND RIGID (RGS) SHALL BE MADE WITH PVC COATED METALLIC LONG SWEEP RADIUS ELBOWS.

D. EMT OR RIGID GALVANIZED STEEL CONDUIT MAY BE USED IN FINISHED SPACES CONCEALED IN WALLS AND CEILINGS. EMT SHALL BE MILD STEEL, ELECTRICALLY WELDED, ELECTRO-GALVANIZED OR HOT-DIPPED GALVANIZED AND PRODUCED TO ANSI SPECIFICATION C80.3, FEDERAL SPECIFICATION WW-C-563, AND SHALL BE UL LISTED. EMT SHALL BE MANUFACTURED BY ALLIED, REPUBLIC OR WHEATLAND, OR APPROVED EQUAL. FITTINGS SHALL BE METALLIC COMPRESSION. SET SCREW CONNECTIONS SHALL NOT BE ACCEPTABLE.

E. LIQUID TIGHT FLEXIBLE METALLIC CONDUIT SHALL BE USED FOR FINAL CONNECTION TO EQUIPMENT. FITTINGS SHALL BE METALLIC GLAND TYPE COMPRESSION FITTINGS, MAINTAINING THE INTEGRITY OF CONDUIT SYSTEM. SET SCREW CONNECTIONS SHALL NOT BE ACCEPTABLE. MAXIMUM LENGTH OF FLEXIBLE CONDUIT SHALL NOT EXCEED 6-FEET. LFMC SHALL BE PROTECTED AND SUPPORTED AS REQUIRE BY NEC. MANUFACTURERS OF FLEXIBLE CONDUITS SHALL BE CAROL, ANACONDA METAL HOSE OR UNIVERSAL METAL HOSE, OR APPROVED EQUAL.

F. MINIMUM SIZE CONDUIT SHALL BE 3/4 INCH (21MM).

HUBS AND BOXES:

A. AT ENTRANCES TO CABINETS OR OTHER EQUIPMENT NOT HAVING INTEGRAL THREADED HUBS PROVIDE METALLIC THREADED HUBS OF THE SIZE AND CONFIGURATION REQUIRED. HUB SHALL INCLUDE LOCKNUT AND NEOPRENE O-RING SEAL. PROVIDE IMPACT RESISTANT 105 DEGREE C PLASTIC BUSHINGS TO PROTECT CABLE INSULATION.

B. CABLE TERMINATION FITTINGS FOR CONDUIT

1. CABLE TERMINATORS FOR RGS CONDUITS SHALL BE TYPE CRC BY O-Z/GEDNEY OR EQUAL BY ROX TEC.
2. CABLE TERMINATORS FOR LFMC SHALL BE ETCO – CL2075; OR MADE FOR THE PURPOSE PRODUCTS BY ROXTEC.

C. EXTERIOR PULL BOXES AND PULL BOXES IN INTERIOR INDUSTRIAL AREAS SHALL BE PLATED CAST ALLOY, HEAVY DUTY, WEATHERPROOF, DUST PROOF, WITH GASKET, PLATED IRON ALLOY COVER AND STAINLESS STEEL COVER SCREWS, CROUSE-HINDS WAB SERIES OR EQUAL.

D. CONDUIT OUTLET BODIES SHALL BE PLATED CAST ALLOY WITH SIMILAR GASKETED COVERS. OUTLET BODIES SHALL BE OF THE CONFIGURATION AND SIZE SUITABLE FOR THE APPLICATION. PROVIDE CROUSE-HINDS FORM 8 OR EQUAL.

E. MANUFACTURER FOR BOXES AND COVERS SHALL BE HOFFMAN, SQUARE "D", CROUSE-HINDS, COOPER, ADALET, APPLETON, O-Z GEDNEY, RACO, OR APPROVED EQUAL.

SUPPLEMENTAL GROUNDING SYSTEM

A. FURNISH AND INSTALL A SUPPLEMENTAL GROUNDING SYSTEM TO THE EXTENT INDICATED ON THE DRAWINGS. SUPPORT SYSTEM WITH NON-MAGNETIC STAINLESS STEEL CLIPS WITH RUBBER GROMMETS. GROUNDING CONNECTORS SHALL BE TINNED COPPER WIRE, SIZES AS INDICATED ON THE DRAWINGS. PROVIDE STRANDED OR SOLID BARE OR INSULATED CONDUCTORS EXCEPTED AS OTHERWISE NOTED.

B. SUPPLEMENTAL GROUNDING SYSTEM: ALL CONNECTIONS TO BE MADE WITH CAD WELDS, EXCEPT AT EQUIPMENT USE LUGS OR OTHER AVAILABLE GROUNDING MEANS AS REQUIRED BY MANUFACTURER; AT GROUND BARS USE TWO HOLE SPADES WITH NO OX.

C. STOLEN GROUND-BARS: IN THE EVENT OF STOLEN GROUND BARS, CONTACT SPRINT CM FOR REPLACEMENT INSTRUCTION USING THREADED ROD KITS.

EXISTING STRUCTURE:

A. EXISTING EXPOSED WIRING AND ALL EXPOSED OUTLETS, RECEPTACLES, SWITCHES, DEVICES, BOXES, AND OTHER EQUIPMENT THAT ARE NOT TO BE UTILIZED IN THE COMPLETED PROJECT SHALL BE REMOVED OR DE-ENERGIZED AND CAPPED IN THE WALL, CEILING, OR FLOOR SO THAT THEY ARE CONCEALED AND SAFE. WALL, CEILING, OR FLOOR SHALL BE PATCHED TO MATCH THE ADJACENT CONSTRUCTION.

CONDUIT AND CONDUCTOR INSTALLATION:

A. CONDUITS SHALL BE FASTENED SECURELY IN PLACE WITH APPROVED NON-PERFORATED STRAPS AND HANGERS. EXPLOSIVE DEVICES FOR ATTACHING HANGERS TO STRUCTURE WILL NOT BE PERMITTED. CLOSELY FOLLOW THE LINES OF THE STRUCTURE. MAINTAIN CLOSE PROXIMITY TO THE STRUCTURE AND KEEP CONDUITS IN TIGHT ENVELOPES. CHANGES IN DIRECTION TO ROUTE AROUND OBSTACLES SHALL BE MADE WITH CONDUIT OUTLET BODIES. CONDUIT SHALL BE INSTALLED IN A NEAT AND WORKMANLIKE MANNER. PARALLEL AND PERPENDICULAR TO STRUCTURE WALL AND CEILING LINES. ALL CONDUIT SHALL BE FISHED TO CLEAR OBSTRUCTIONS. ENDS OF CONDUITS SHALL BE TEMPORARILY CAPPED TO PREVENT CONCRETE, PLASTER OR DIRT FROM ENTERING. CONDUITS SHALL BE RIGIDLY CLAMPED TO BOXES BY GALVANIZED MALLEABLE IRON BUSHING ON INSIDE AND GALVANIZED MALLEABLE IRON LOCKNUT ON OUTSIDE AND INSIDE.

B. CONDUCTORS SHALL BE PULLED IN ACCORDANCE WITH ACCEPTED GOOD PRACTICE.

ENGINEERS NOTES

1. IF A DISCREPANCY ARISES BETWEEN THE DRAWINGS AND FIELD CONDITIONS, OR WHERE A DETAIL IS DOUBTFUL OF INTERPRETATION, OR AN UNANTICIPATED FIELD CONDITION IS ENCOUNTERED, THE ENGINEER SHALL BE CALLED IMMEDIATELY FOR PROCEDURE TO BE FOLLOWED. SUCH INSTRUCTIONS SHALL BE CONFIRMED IN WRITING AND DISTRIBUTED TO ALL AFFECTED PARTIES.

2. THE ENGINEER WILL NOT BE RESPONSIBLE FOR CONSTRUCTION MEANS, METHODS, TECHNIQUES, SEQUENCES, PROCEDURES, SAFETY PRECAUTIONS, OR PROGRAMS UTILIZED IN CONNECTION WITH THE WORK, AND WILL NOT BE RESPONSIBLE FOR THE CONTRACTOR'S FAILURE TO CARRY OUT THE WORK IN ACCORDANCE WITH THE CONSTRUCTION DRAWING AND/OR DOCUMENTS.

3. CONTRACTOR SHALL BE RESPONSIBLE FOR PROPER LAYOUT OF IMPROVEMENTS BASED UPON SETBACKS/PROPERTY LINE LOCATION. DIMENSIONAL RELATIONSHIPS TO EQUIPMENT ARE APPROXIMATE AND ARE FOR ILLUSTRATIVE PURPOSES ONLY.

4. CONTRACTOR TO MAINTAIN ALL DRAINAGE PATHS FREE FROM ANY OBSTRUCTIONS (I.E. DEBRIS AND SILT).

5. CONTRACTOR TO PROVIDE POSITIVE DRAINAGE AWAY FROM EQUIPMENT.

6. IF THE SPECIFIED EQUIPMENT CANNOT BE INSTALLED AS SHOWN ON THESE DRAWINGS, THE SUBCONTRACTOR SHALL PROPOSE AN ALTERNATIVE INSTALLATION FOR APPROVAL BY THE CONTRACTOR AND ENGINEER OF RECORD.

7. SUBCONTRACTOR SHALL DETERMINE ACTUAL ROUTING OF CONDUIT, POWER AND T1 CABLES, GROUNDING CABLES AS SHOWN ON THE POWER, GROUNDING AND TELCO PLAN DRAWING. SUBCONTRACTOR SHALL UTILIZE EXISTING TRAYS AND/OR SHALL ADD NEW TRAYS AS NECESSARY. SUBCONTRACTOR SHALL CONFIRM THE ACTUAL ROUTING WITH THE CONTRACTOR. ROUTING OF TRENCHING SHALL BE APPROVED BY CONTRACTOR

UTILITY NOTES

1. IT SHALL BE THE CONTRACTORS RESPONSIBILITY TO CONTACT BLUESTAKE AT LEAST TWO FULL WORKING DAYS (48 HOURS) PRIOR TO BEGINNING OF ANY EXCAVATING.

2. IT SHALL BE THE CONTRACTORS RESPONSIBILITY TO LOCATE ALL STRUCTURES, UNDERGROUND PIPELINES, ELECTRIC AND TELEPHONE CONDUITS, EITHER SHOWN OR NOT SHOWN ON THE PLANS PRIOR TO ANY CONSTRUCTION, AND TO OBSERVE ALL POSSIBLE PRECAUTIONS TO AVOID ANY DAMAGE TO THESE FACILITIES. THE ENGINEERING AND/OR DEVELOPER WILL NOT GUARANTEE ANY ELEVATIONS OR LOCATIONS OF EXISTING UNDERGROUND UTILITIES SHOWN ON THESE PLANS.

3. CONTRACTOR TO VERIFY LOCATION AND ELEVATION OF ALL UTILITY CONNECTIONS.

PLANS PREPARED FOR

Sprint
Together with Nextel.

CONSULTANT

COAL CREEK CONSULTING
2166 E. UNIVERSITY DR., STE 201
TEMPE, ARIZONA 85281
PHONE: (602) 429-0533 FAX: (480) 638-2832

ENGINEER OF RECORD

TERRA DYNAMIC ENGINEERING, LLC
P.O. BOX 22131, PHOENIX, AZ 85028
PHONE: (602) 482-1603
EMAIL: ROBERTO@TERRADYNAMIC.US

NO.	DATE	DESCRIPTION	BY
1	05/08/19	REVIEW	SPE
2	05/14/19	REVISION 1	SPE
3	05/21/19	REVISION 2	SPE
4	05/23/19	SUBMITTAL	SPE

PROJECT INFORMATION
JOB: 01-225-04

PH60XC104
DAYS INN
AND SUITES

7330 N. PIMA RD.
SCOTTSDALE, ARIZONA 85258

SHEET TITLE

SPRINT
SPECIFICATIONS,
ENGINEERS AND
UTILITY NOTES

SHEET NUMBER

SP-2

30-UP-1999#2
6/27/2019

NOTE:
ITEMS NOT DIMENSIONED ARE FOR GRAPHICAL REPRESENTATION ONLY

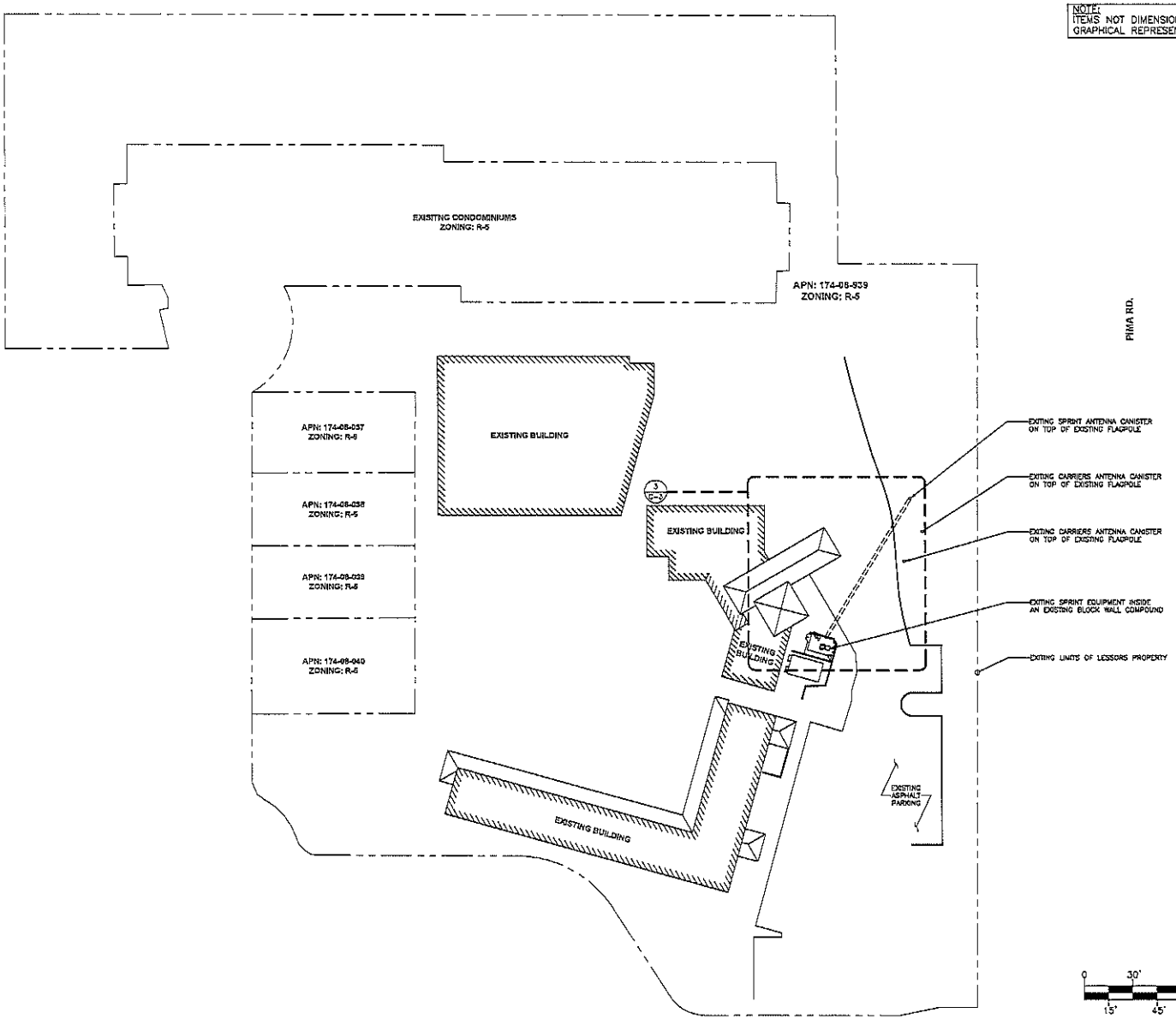

SITE PLAN

SCALE: 1" = 30'-0" | 1

PLANS PREPARED FOR

Sprint
Together with Nextel.

CONSULTANT

COAL CREEK CONSULTING
2155 E. UNIVERSITY DR., STE 201
TEMPE, ARIZONA 85281
PHONE: (602) 429-0533 FAX: (480) 835-2892

ENGINEER OF RECORD

TERRA DYNAMIC ENGINEERING, LLC
P.O. BOX 22131, PHOENIX, AZ 85028
PHONE: (602) 482-1603
EMAIL: ROBERTO@TERRADYNAMIC.US

NO.	DATE	DESCRIPTION	BY
1	05/08/19	REVIEW	SPE
2	05/14/19	REVISION 1	SPE
3	05/21/19	REVISION 2	SPE
4	05/23/19	SUBMITTAL	SPE

PROJECT INFORMATION
JOB: 01-233-04

PH60XC104
DAYS INN
AND SUITES

7330 N. PIMA RD.
SCOTTSDALE, ARIZONA 85258

SHEET TITLE

SITE PLAN

SHEET NUMBER

C-1

30-UP-1999#2
6/27/2019

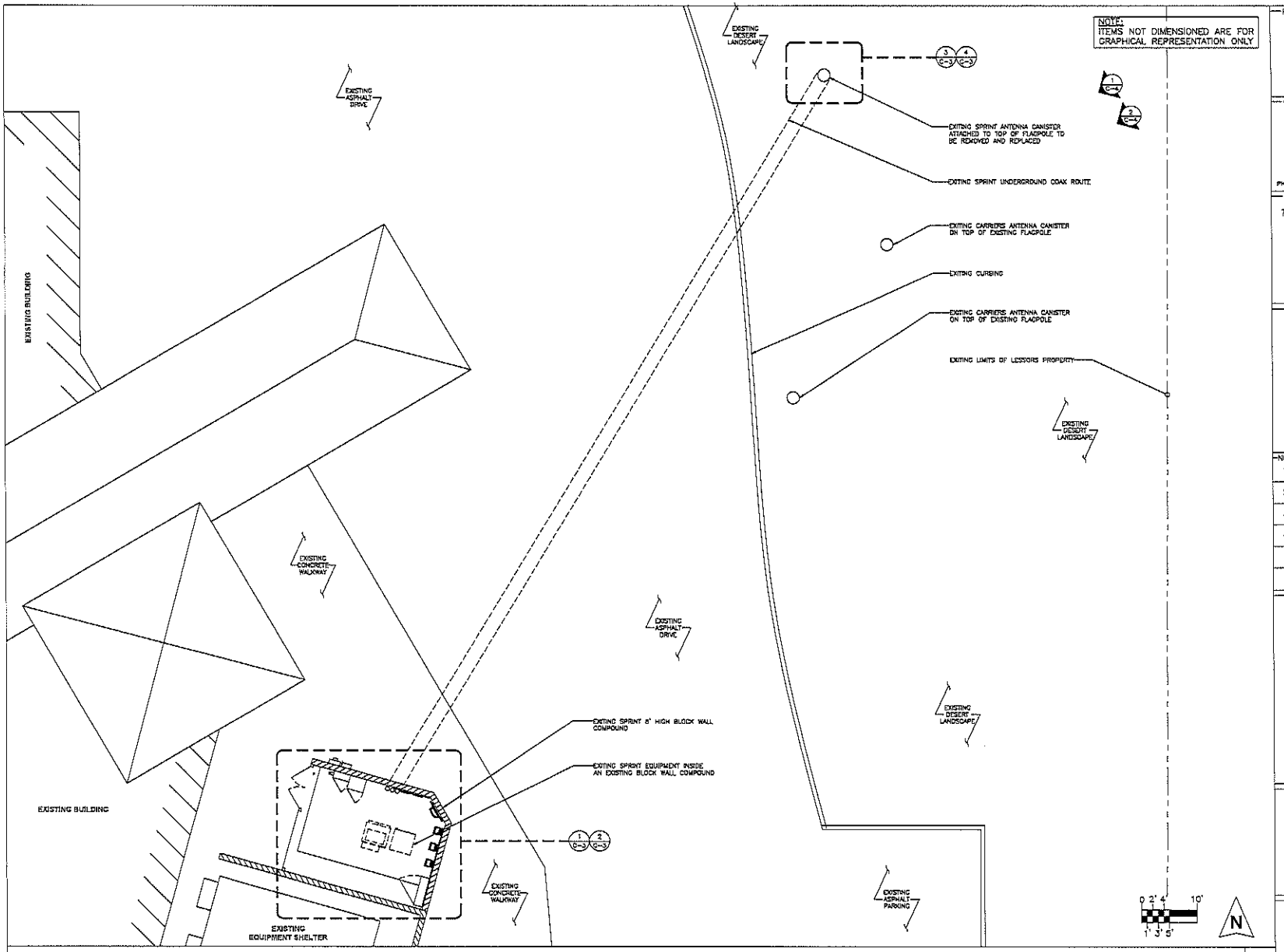

SITE PLAN

SCALE: 1/8" = 1'-0" | 1

PLANS PREPARED FOR

Sprint
Together with Nextel.

CONSULTANT

COAL CREEK CONSULTING
2166 E. UNIVERSITY DR., STE. 201
TEMPE, ARIZONA 85281
PHONE: (602) 429-0533 FAX: (480) 638-2852

ENGINEER OF RECORD

TERRA DYNAMIC ENGINEERING, LLC
P.O. BOX 22131, PHOENIX, AZ 85028
PHONE: (602) 482-1603
EMAIL: ROBERTO@TERRADYNAMIC.US

NO.	DATE	DESCRIPTION	BY
1	05/08/19	REVIEW	SPE
2	05/14/19	REVISION 1	SPE
3	05/21/19	REVISION 2	SPE
4	05/23/19	SUBMITTAL	SPE

PROJECT INFORMATION
JOB: 01-235-04

PH60XC104
DAYS INN
AND SUITES

7330 N. PIMA RD.
SCOTTSDALE, ARIZONA 85258

SHEET TITLE

SITE PLAN

SHEET NUMBER

C-2

30-UP-1999#2
6/27/2019

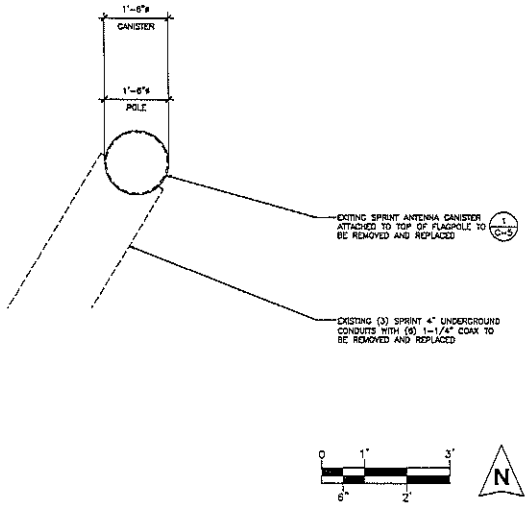

EXISTING ANTENNA PLAN SCALE: 3/4" = 1'-0" 3

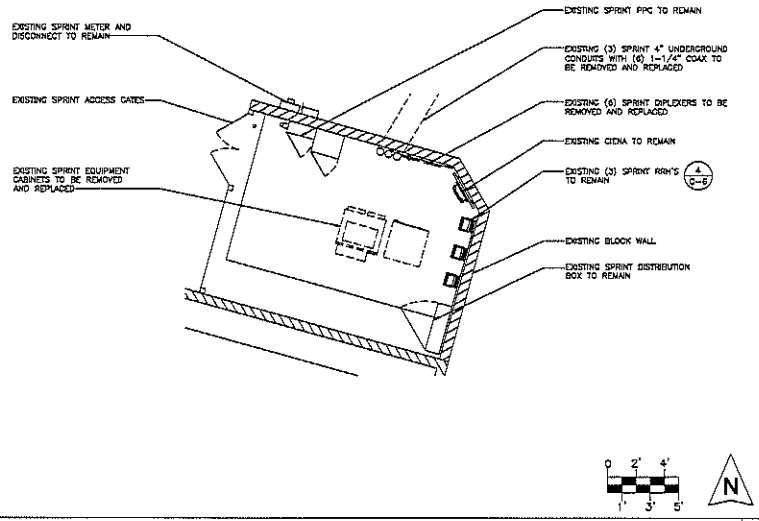

EXISTING EQUIPMENT PLAN SCALE: 1/4" = 1'-0" 1

NOTES:
STRUCTURAL ANALYSIS MUST BE PERFORMED ON ALL POLES, TOWERS & ROOFTOPS BEFORE INSTALLATION OF ANY NEW ANTENNAS AND/OR RRH'S. STRUCTURAL ANALYSIS PROVIDED BY OTHERS.

ANTENNA CLEARANCE AND MOUNTING TO BE FIELD VERIFIED PRIOR TO CONSTRUCTION WITH FINAL ANTENNA SPECIFICATIONS, MOUNTING HARDWARE, AND RF DESIGN. ANTENNA PIPE MOUNT MODIFICATION MAY BE REQUIRED.

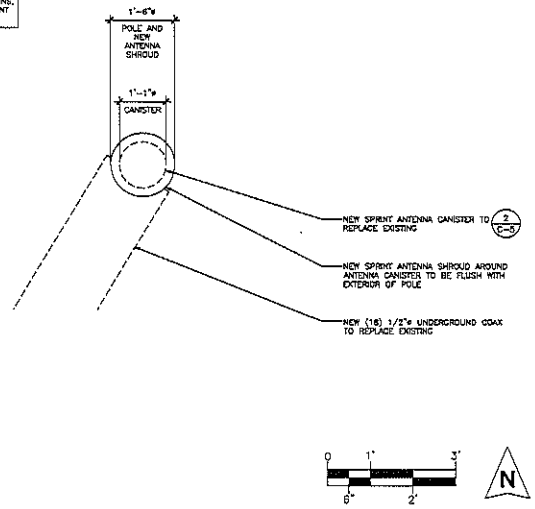

FINAL ANTENNA PLAN SCALE: 3/4" = 1'-0" 4

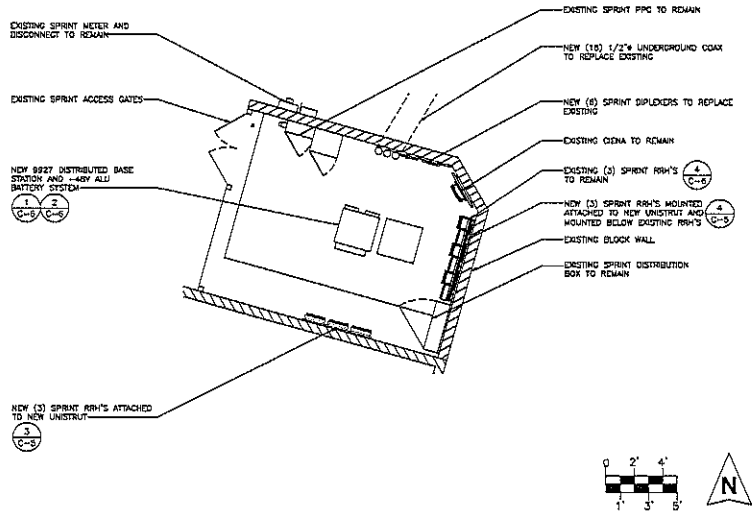

FINAL EQUIPMENT PLAN SCALE: 1/4" = 1'-0" 2

PLANS PREPARED FOR

Sprint
Together with Nextel.

CONSULTANT

COAL CREEK CONSULTING
2168 E. UNIVERSITY DR., STE 201
TEMPE, ARIZONA 85281
PHONE: (602) 429-9533 FAX: (480) 836-2652

ENGINEER OF RECORD

TERRA DYNAMIC ENGINEERING, LLC
P.O. BOX 22131, PHOENIX, AZ 85028
PHONE: (602) 482-1603
EMAIL: ROBERT@TERRADYNAMIC.US

NO.	DATE	DESCRIPTION	BY
1	05/08/19	REVIEW	SPE
2	05/14/19	REVISION 1	SPE
3	05/21/19	REVISION 2	SPE
4	05/23/19	SUBMITTAL	SPE

PROJECT INFORMATION
JOB: 01-235-04

PH60XC104
DAYS INN
AND SUITES

7330 N. PIMA RD.
SCOTTSDALE, ARIZONA 85258

SHEET TITLE

EXISTING/NEW EQUIPMENT AND ANTENNA PLAN

SHEET NUMBER

C-3

30-UP-1999#2
6/27/2019

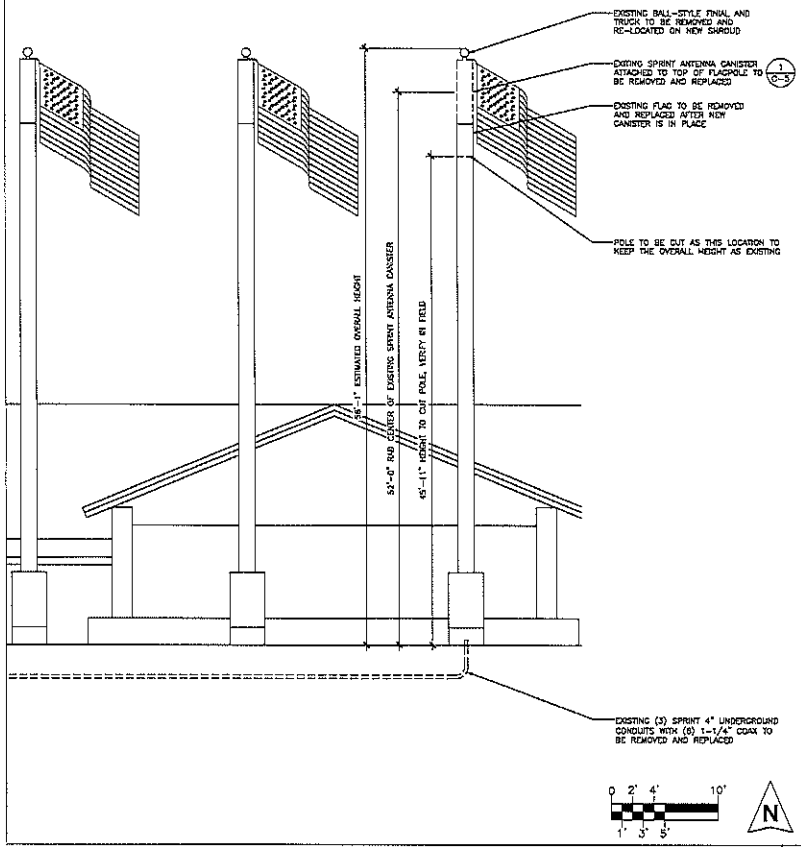

EXISTING NORTH EAST ELEVATION SCALE: 3/16" = 1'-0" 2

NOTE:
REPAINT THE ENTIRE FLAGPOLE TO MATCH EXISTING AND REPLACE THE FLAG AND ASSOCIATED EQUIPMENT

NOTES:
STRUCTURAL ANALYSIS MUST BE PERFORMED ON ALL POLES, TOWERS & ROOFTOPS BEFORE INSTALLATION OF ANY NEW ANTENNAS AND/OR RRH'S. STRUCTURAL ANALYSIS PROVIDED BY OTHERS.

ANTENNA CLEARANCE AND MOUNTING TO BE FIELD VERIFIED PRIOR TO CONSTRUCTION WITH FINAL ANTENNA SPECIFICATIONS, MOUNTING HARDWARE, AND RF DESIGN. ANTENNA PIPE MOUNT MODIFICATION MAY BE REQUIRED.

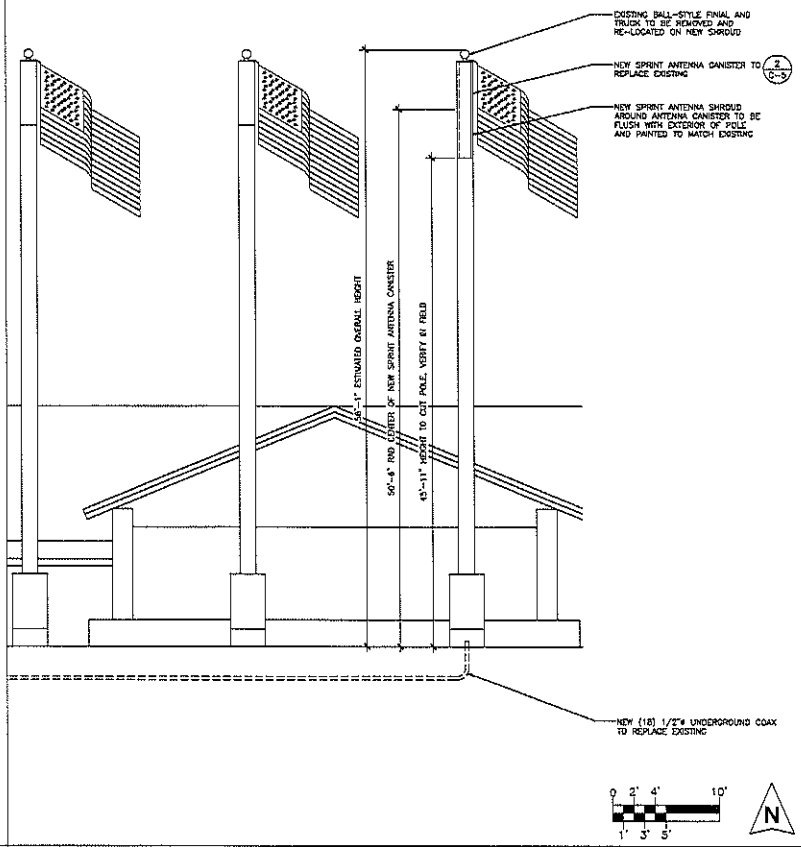

NEW NORTH EAST ELEVATION SCALE: 3/16" = 1'-0" 2

PLANS PREPARED FOR

Sprint
Together with Nextel.

CONSULTANT

COAL CREEK CONSULTING
2166 E. UNIVERSITY DR., STE 201
TEMPE, ARIZONA 85281
PHONE: (602) 429-0533 FAX: (480) 638-2852

ENGINEER OF RECORD

TERRA DYNAMIC ENGINEERING, LLC
P.O. BOX 22131, PHOENIX, AZ 85028
PHONE: (602) 482-1603
EMAIL: ROBERTO@TERRADYNAMICUS

NO.	DATE	DESCRIPTION	BY
1	05/08/19	REVIEW	SPE
2	05/14/19	REVISION 1	SPE
3	05/21/19	REVISION 2	SPE
4	05/23/19	SUBMITTAL	SPE

PROJECT INFORMATION
JOB: 01-235-04

PH60XC104
DAYS INN
AND SUITES

7330 N. PIMA RD.
SCOTTSDALE, ARIZONA 85258

SHEET TITLE

EXISTING/FINAL
ELEVATION

SHEET NUMBER

C-4

30-UP-1999#2
6/27/2019

MANUFACTURE: ALCATEL-LUCENT
MODEL: RRH # TD-RRHBX20-25

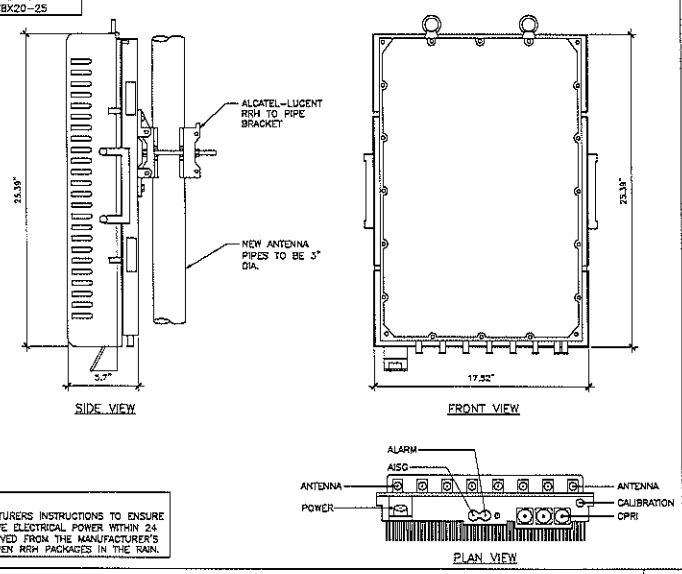

NOTES
COMPLY WITH MANUFACTURERS INSTRUCTIONS TO ENSURE THAT ALL RRH'S RECEIVE ELECTRICAL POWER WITHIN 24 HOURS OF BEING REMOVED FROM THE MANUFACTURER'S PACKAGING. DO NOT OPEN RRH PACKAGES IN THE RAIN.

RRH AND MOUNTING BRACKET DETAIL — SCALE: N.T.S. — 3

MANUFACTURER: UNKNOWN
MODEL: UNKNOWN
DIMENSIONS: HxDIA.In: 98.5"x21"ø
WEIGHT: 95 LBS

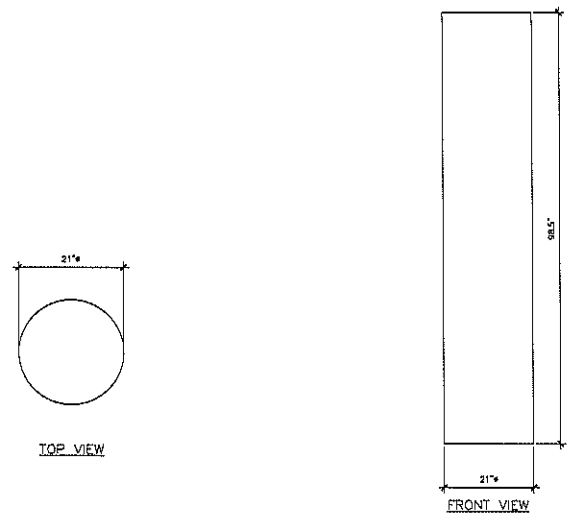

EXISTING ANTENNA CANISTER TO BE REMOVED — SCALE: N.T.S. — 1

MANUFACTURER: ALCATEL-LUCENT
MODEL: RRH # 800MHZ

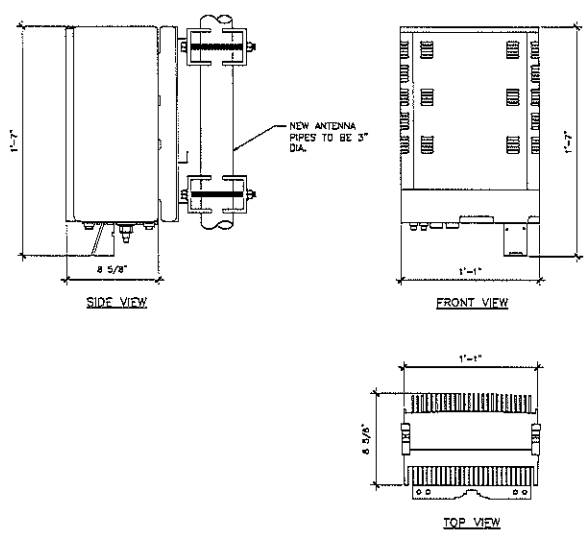

800 RRH DETAIL — SCALE: N.T.S. — 4

MANUFACTURER: ALPHA
MODEL: AW3363
DIMENSIONS: HxDIA.In: 108.6"x13.39"ø
WEIGHT: 95 LBS

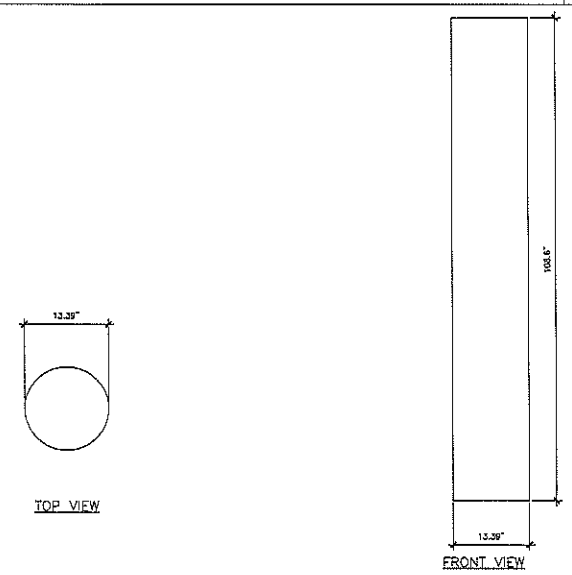

NEW ANTENNA CANISTER — SCALE: N.T.S. — 2

PLANS PREPARED FOR
Sprint
Together with Nextel.

CONSULTANT
COAL CREEK CONSULTING
2168 E. UNIVERSITY DR., STE 201
TEMPE, ARIZONA 85281
PHONE: (602) 429-0533 FAX: (480) 638-2852

ENGINEER OF RECORD
TERRA DYNAMIC ENGINEERING, LLC
P.O. BOX 22131, PHOENIX, AZ 85028
PHONE: (602) 482-1603
EMAIL: ROBERT@TERRADYNAMIC.US

NO.	DATE	DESCRIPTION	BY
1	05/08/19	REVIEW	SPE
2	05/14/19	REVISION 1	SPE
3	05/21/19	REVISION 2	SPE
4	05/23/19	SUBMITTAL	SPE

PROJECT INFORMATION
JOB: 01-235-04

PH60XC104
DAYS INN
AND SUITES

7330 N. PIMA RD.
SCOTTSDALE, ARIZONA 85258

SHEET TITLE
EQUIPMENT DETAILS

SHEET NUMBER
C-5

30-UP-1999#2
6/27/2019

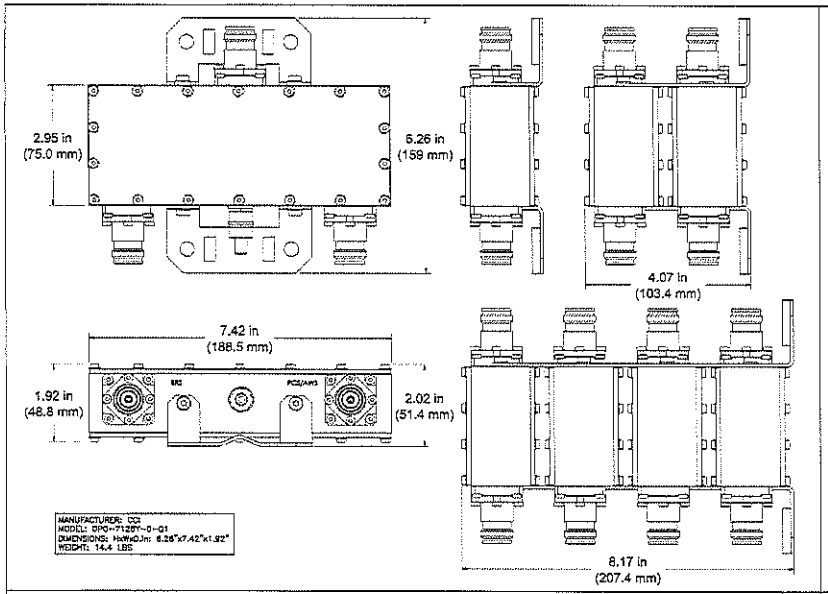

DIPLEXER SCALE: N.T.S. 3

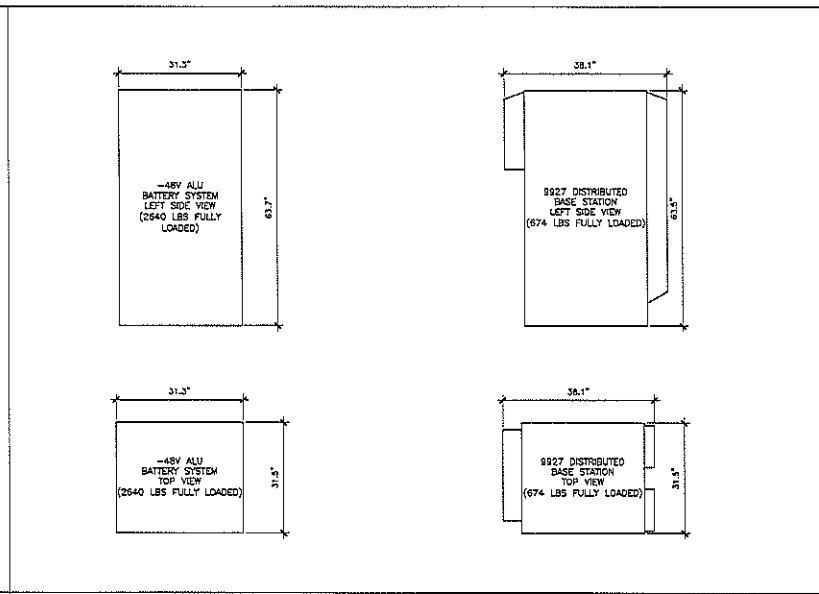

9927 DISTRIBUTED BASE STATION & -48V BATTERY CABINET SCALE: N.T.S. 1

MANUFACTURER: ALCATEL-LUCENT
MODEL: RRH # 800MHZ

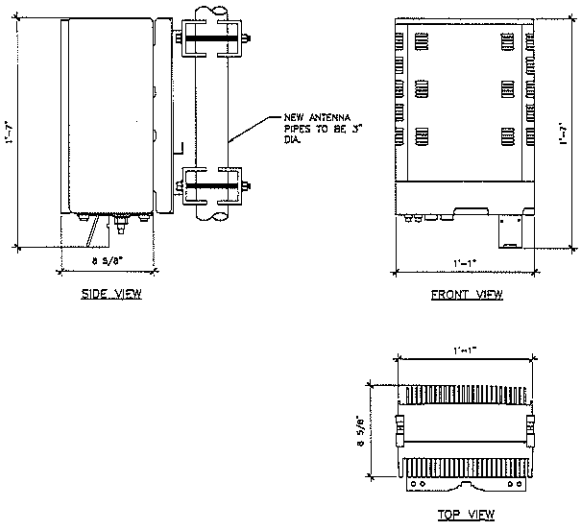

800 RRH DETAIL SCALE: N.T.S. 4

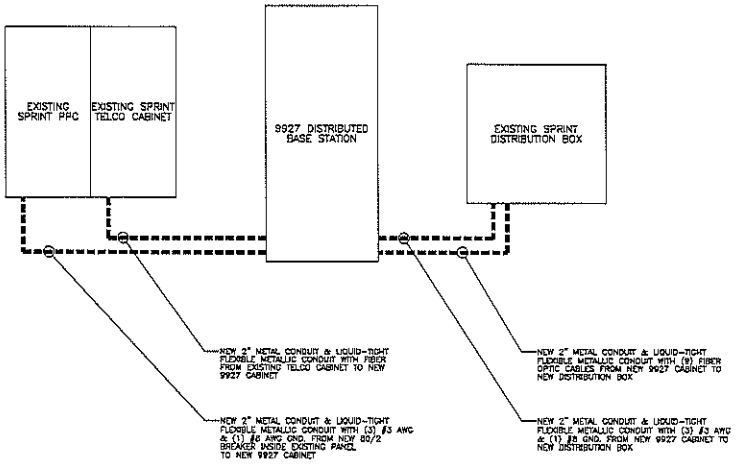

9927 CONDUIT ROUTING SCHEMATIC SCALE: N.T.S. 2

PLANS PREPARED FOR

Sprint
Together with Nextel.

CONSULTANT

COAL CREEK CONSULTING
2165 E. UNIVERSITY DR., STE 201
TEMPE, ARIZONA 85281
PHONE: (602) 429-0533 FAX: (480) 638-2852

ENGINEER OF RECORD

TERRA DYNAMIC ENGINEERING, LLC
P.O. BOX 22131, PHOENIX, AZ 85028
PHONE: (602) 482-1503
EMAIL: ROBERTO@TERRADYNAMIC.US

NO.	DATE	DESCRIPTION	BY
1	05/08/19	REVIEW	SPE
2	05/14/19	REVISION 1	SPE
3	05/21/19	REVISION 2	SPE
4	05/23/19	SUBMITTAL	SPE

PROJECT INFORMATION
JOB: 01-235-04

PH60XC104
DAYS INN
AND SUITES

7330 N. PIMA RD.
SCOTTSDALE, ARIZONA 85258

SHEET TITLE

EQUIPMENT DETAILS

SHEET NUMBER

C-6

30-UP-1999#2
6/27/2019

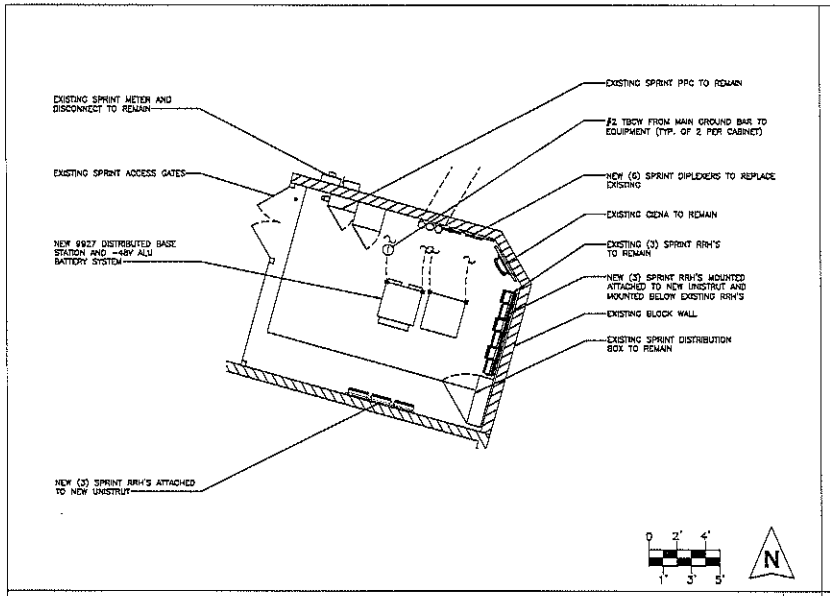

GROUNDING PLAN SCALE: 1/4" = 1'-0" 3

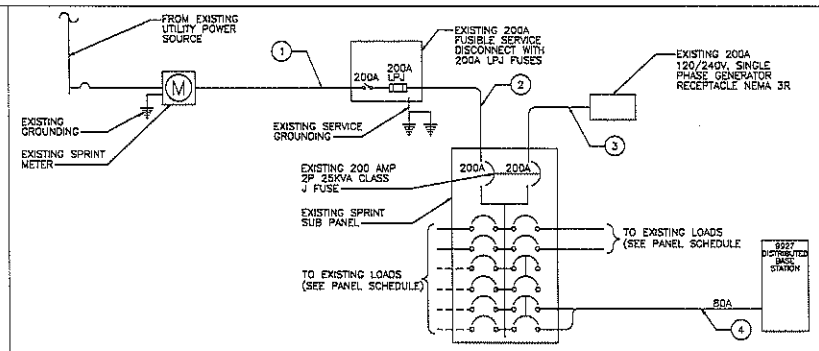

CIRCUIT SCHEDULE			
#	FROM	TO	CONFIGURATION
1	BUILDING POWER	DISCONNECT	EXISTING
2	DISCONNECT	TRANSFER & LOAD CENTER	EXISTING
3	TRANSFER & LOAD CENTER	GENERATOR RECEPTACLE	EXISTING
4	TRANSFER & LOAD CENTER	9927 DISTRIBUTED BASE STATION	(3) #3 AWG, (1) #8 GND IN 2" CONDUIT

ELECTRICAL ONE-LINE DIAGRAM SCALE: N.T.S. 1

NOTES:

1. EXISTING SINGLE PHASE, 120/240 VAC, 60HZ SERVICE WILL PROVIDE SUFFICIENT POWER REQUIREMENTS FOR NEW PROPOSED SPRINT EQUIPMENT, CABLING & ANTENNA UPGRADES.
2. GC SHALL COORDINATE WITH ELECTRICIAN PRIOR TO START OF CONSTRUCTION.
3. FOR COMPLETE INTERNAL WIRING AND ARRANGEMENT REFER TO DRAWINGS PROVIDED BY PANEL MANUFACTURER.
4. ALL SERVICE EQUIPMENT AND INSTALLATIONS SHALL COMPLY WITH THE N.E.C., UTILITY COMPANY AND LOCAL CODE REQUIREMENTS.
5. EXISTING CONDUIT WITH ALL CONDUIT FITTINGS (NUTS, REDUCING BUSHINGS, ELBOWS, COUPLINGS, ETC.) NECESSARY FOR N.E.C. COMPLIANT CONNECTIONS.
6. SUBCONTRACTOR SHALL PROVIDE ELECTRICAL SERVICES EQUIPMENT WITH FAULT CURRENT RATING GREATER THAN THE AVAILABLE FAULT CURRENT FROM THE POWER UTILITY.
7. POWER, CONTROL AND EQUIPMENT GROUND WIRING IN TUBING OR CONDUIT SHALL BE SINGLE CONDUCTOR (#10 AWG OR LARGER) VIEW 600V, OIL RESISTANT THHN OR THWN-2, CLASS B STRANDED COPPER CABLE RATED FOR 75°C (WET AND DRY) OPERATION; LISTED OR LABELED FOR THE LOCATION AND RACEWAY SYSTEM USED.
8. CUT, COIL AND TAPE A 10 FOOT PIGTAIL FROM END OF FLEX CONDUIT FOR TERMINATING BY MANUFACTURER.

EXISTING PANEL "A" SCHEDULE (PPC)

120/240, 1φ, 3W
100A MCB

CKT NO.	CKT BREAKERS AMPS	CKT BREAKERS POLES	DESCRIPTION	VA	LOAD (VA) L1	LOAD (VA) L2	VA	DESCRIPTION	CKT BREAKERS AMPS	CKT BREAKERS POLES	CKT NO.
1	100	2	RADIO EQUIPMENT	7600	7600	---	0	TVSS	30	2	2
3				7600	---	7600	0				4
5			BLANK		240	---	240	LIGHTING	10	1	6
7			BLANK		---	480	480	CFCI/INTERNAL	20	1	8
9			BLANK		480	---	480	MECH/E/FAN *OFF*	20	1	10
11			BLANK		---	480	480	SPARE	20	1	12
13			BLANK					BLANK			14
15			BLANK					BLANK			16
17			BLANK					BLANK			18
19			BLANK					BLANK			20
21			BLANK					BLANK			22
23			BLANK					BLANK			24
PHASE TOTAL (VA) (INCL. SUB PANEL)					8320	8560					
TOTAL CONNECTED (VA)					16880						
25% OF CONTINUOUS LOAD					4220						
TOTAL LOAD (VA)					21100						
TOTAL LOAD (AMPS)					88						

NOTE :
CONNECTED LOAD ESTIMATES BASED ON TYPICAL EQUIPMENT AT SIMILAR CELL SITES. CONTRACTOR TO VERIFY PEAK DEMAND FROM POWER COMPANY AND REPORT ANY DISCREPANCIES PRIOR TO CONSTRUCTION.

FINAL PANEL "A" SCHEDULE (PPC)

120/240, 1φ, 3W
100A MCB

CKT NO.	CKT BREAKERS AMPS	CKT BREAKERS POLES	DESCRIPTION	VA	LOAD (VA) L1	LOAD (VA) L2	VA	DESCRIPTION	CKT BREAKERS AMPS	CKT BREAKERS POLES	CKT NO.
1	100	2	RGG 4.0 CABINET	7600	7600	---	0	TVSS	30	2	2
3				7600	---	7600	0				4
5			BLANK		240	---	240	LIGHTING	10	1	6
7			BLANK		---	480	480	CFCI/INTERNAL	20	1	8
9			BLANK		480	---	480	MECH/E/FAN *OFF*	20	1	10
11			BLANK		---	480	480	SPARE	20	1	12
13			BLANK					BLANK			14
15			BLANK					BLANK			16
17			BLANK					BLANK			18
19			BLANK					BLANK			20
21			BLANK					BLANK			22
23			BLANK					BLANK			24
PHASE TOTAL (VA) (INCL. SUB PANEL)					8320	8560					
TOTAL CONNECTED (VA)					16880						
25% OF CONTINUOUS LOAD					4220						
TOTAL LOAD (VA)					21100						
TOTAL LOAD (AMPS)					88						

NOTE :
CONNECTED LOAD ESTIMATES BASED ON TYPICAL EQUIPMENT AT SIMILAR CELL SITES. CONTRACTOR TO VERIFY PEAK DEMAND FROM POWER COMPANY AND REPORT ANY DISCREPANCIES PRIOR TO CONSTRUCTION.

~~EXISTING~~/UPDATED PANEL SCHEDULE AND NOTES SCALE: N.T.S. 2

PLANS PREPARED FOR

Sprint
Together with Nextel.

CONSULTANT

COAL CREEK CONSULTING
2165 E. UNIVERSITY DR., STE 201
TEMPE, ARIZONA 85281
PHONE: (602) 429-0533 FAX: (480) 838-2832

ENGINEER OF RECORD

TERRA DYNAMIC ENGINEERING, LLC
P.O. BOX 22131, PHOENIX, AZ 85028
PHONE: (602) 482-1603
EMAIL: ROBERT@TERRADYNAMIC.US

NO.	DATE	DESCRIPTION	BY
1	05/06/19	REVIEW	SPE
2	05/14/19	REVISION 1	SPE
3	05/21/19	REVISION 2	SPE
4	05/23/19	SUBMITTAL	SPE

PROJECT INFORMATION
JOB: 01-235-04

PH60XC104
DAYS INN
AND SUITES

7330 N. PIMA RD.
SCOTTSDALE, ARIZONA 85258

SHEET TITLE

ONE-LINE, PANEL SCHEDULES AND GROUNDING PLAN

SHEET NUMBER

E-1